The Town of North East
North East Water Works

STANDARD SPECIFICATIONS FOR
WATER DISTRIBUTION
AND
DETAILS FOR WATER SERVICE

TOWN OF NORTH EAST, MARYLAND

STANDARD WATER DETAILS AND SPECIFICATIONS

NUMBER	TITLE
PGS 1-11	STANDARD SPECIFICATIONS FOR WATER DISTRIBUTION
W-1 (3 pgs)	STANDARD INSTALLATION 3/4" DOMESTIC SERVICE WITH 5/8" METER (REV 5-25-16)
W-2 (3 pgs)	STANDARD INSTALLATION 3/4" DOMESTIC SERVICE WITH 5/8" METER (W/TANDEM PRV) (REV 5-25-16)
W-3 (2 pgs)	STANDARD INSTALLATION 1" METERED DOMESTIC SERVICE (REV 5-25-16)
W-4 (2 pgs)	STANDARD INSTALLATION 1" METERED DOMESTIC SERVICE (W/TANDEM PRV) (REV 5-25-16)
W-5	STANDARD SPRINKLER SERVICE CONNECTION DIAGRAM
W-6	FIRE HYDRANT SETTINGS (REV 5-25-16)
W-7	METHOD OF STRAPPING VALVE TO MAIN
W-8	PIPE TRENCH DETAIL
W-9	BUTTRESS FOR TEES
W-10	BUTTRESS FOR CAPS AND HORIZONTAL BENDS
W-11	ANCHORAGES FOR VERTICAL BENDS
W-12	BUTTRESSES AND ANCHORAGES FOR VERTICAL BENDS
W-13	BUTTRESSES FOR 1/4 BENDS
W-14	CAP AND BLOW-OFF
W-15 (2 pgs)	METERED WATER SERVICE (3/4" THRU 3") & FIRE SUPPLY (REV 5-25-16)
W-16 (2 pgs)	STANDARD INSTALLATION 2" METERED DOMESTIC SERVICE (1-1/2" OR 2" METER) (REV 5-25-16)
W-17 (2 pgs)	DETAIL OF SMALL SECTIONAL CONCRETE VAULT
W-18 (2 pgs)	STANDARD INSTALLATION 4" & 6" DOMESTIC WATER SUPPLY SERVICE (3" & 4" METER) (REV 5-25-16)
W-19 (2 pgs)	STANDARD INSTALLATION 6" DOMESTIC WATER SUPPLY SERVICE (6" METER) (REV 5-25-16)
W-20 (2 pgs)	STANDARD INSTALLATION FOR 4" THRU 10" COMBINED FIRE AND DOMESTIC SERVICE (REV 5-25-16)
W-21	AIR RELEASE VALVE AND VAULT FOR 12" AND SMALLER WATER MAINS
W-22	STANDARD BOLLARD
W-23	PAVING REPAIR CRITERIA
W-24 (2 pgs)	H.D.P.E./M.J. ADAPTOR
W-25 (2 pgs)	FIRE SERVICE (4" THRU 10" FIRE SUPPLY) (REV 5-25-16)

TOWN OF NORTH EAST, MARYLAND

STANDARD SPECIFICATIONS

FOR WATER DISTRIBUTION

THE FOLLOWING SPECIFICATIONS IN THEIR ENTIRETY AND WITHOUT ANY MODIFICATIONS SHALL BE PLACED ON THE CONTRACT DRAWINGS FOR ALL PROJECTS INVOLVING WATER SERVICE WITHIN THE TOWN'S SERVICE AREA. THE ELECTRONIC FILE OF THESE SPECIFICATIONS SHALL BE REQUESTED FROM THE TOWN ENGINEER.

I. GENERAL

1. **ALL MATERIALS AND CONSTRUCTION SHALL BE IN ACCORDANCE WITH THE CURRENT REVISION OF THE SPECIFICATIONS AND STANDARD DETAILS FOR WATER MAINS OF THE TOWN OF NORTH EAST.**

2. **A PRECONSTRUCTION MEETING SHALL BE SCHEDULED BY THE OWNER/DEVELOPER TO BE CONVENED AT LEAST TWO (2) WEEKS PRIOR TO BEGINNING ANY CONSTRUCTION WORK. AT A MINIMUM, THE MEETING SHALL BE ATTENDED BY THE FOLLOWING PARTIES:**

   OWNER .....(___-___-____)
   DESIGN ENGINEER .....(___-___-____)
   PRIME CONTRACTOR .....(___-___-____)
   SUBCONTRACTORS .....(___-___-____)
   NORTH EAST WATER SYSTEM OPERATIONS .....(410-287-8102)
   TOWN ENGINEER (CNA, INC.) .....(410-879-7200)
   TOWN INSPECTOR (CNA INC.).....(410-879-7200)

   TOWN REPRESENTATIVES .....(410-287-5801)

3. **CONTRACTOR SHALL NOTIFY THE FOLLOWING AGENCIES AT LEAST FIVE (5) BUSINESS DAYS PRIOR TO BEGINNING CONSTRUCTION:**

   TOWN OF NORTH EAST VIA FAX.....(410-287-8267)
   CECIL COUNTY DEPT. OF PUBLIC WORKS.....(410-996-5200)
   MD DEPARTMENT OF THE ENVIRONMENT .....(410-537-3785)
   MISS UTILITY .....(800-257-7777)
   CECIL COUNTY ROADS DIVISION FOR ALL
   WORK ON COUNTY ROADS .....(410-996-6270)
   WATER SYSTEM OPERATIONS VIA FAX……(410-287-9355)
   TOWN ENGINEER:
   CNA, INC. VIA FAX.....(410-838-1811)

4. **THE CONTRACTOR SHALL SUBMIT A PLAN FOR PROPER PUBLIC NOTIFICATION FOR SHUTDOWN OF EXISTING WATER MAINS TO THE TOWN FOR APPROVAL AT LEAST THREE (3) WEEKS PRIOR TO A SCHEDULED SHUTDOWN. A LEGAL NOTICE SHALL BE PUBLISHED IN THE CECIL WHIG**

ONE WEEK AHEAD OF TIME, A 4' x 4' MINIMUM SIZE SIGN SHALL BE POSTED AND/OR DOOR HANGERS WILL BE REQUIRED AS DETERMINED BY THE TOWN. A COPY OF THE LEGAL NOTICE SHALL BE FORWARDED TO TOWN HALL FOR APPROVAL PRIOR TO PUBLICATION.

5. **IN THE EVENT CONSTRUCTION IS NOT COMPLETED WITHIN TWELVE (12) MONTHS OF THE DATE OF THE PUBLIC WORKS AGREEMENT OR IN THE ABSENCE OF A PUBLIC WORKS AGREEMENT WITHIN TWELVE (12) MONTHS OF THE DATE OF THE UTILITY/CONSTRUCTION PLANS, THEN ALL OF SUCH IMPROVEMENTS SHALL BE INSTALLED IN ACCORDANCE WITH THE STANDARD SPECIFICATIONS AND STANDARD WATER DETAILS APPROVED AT THE TIME OF CONSTRUCTION OR INSTALLATION, IF DETERMINED BY THE TOWN TO BE NECESSARY, IN ORDER TO COMPLY WITH CURRENT ORDINANCES, RESOLUTIONS, SPECIFICATIONS AND REGULATIONS.**

6. **EXISTING UTILITIES ARE SHOWN FOR THE CONVENIENCE OF THE CONTRACTOR AND THE COMPLETENESS OR ACCURACY OF THE SAME IS NOT GUARANTEED. THE CONTRACTOR SHALL DETERMINE THE LOCATION AND ELEVATION OF THE EXISTING UTILITIES BEFORE TRENCH EXCAVATION BEGINS. HE SHALL PROTECT SERVICE CONNECTIONS AND MAINTAIN THEIR UNINTERRUPTED SERVICE. ANY DAMAGE CAUSED BY THE CONTRACTOR SHALL BE REPAIRED IMMEDIATELY. THE COST OF SUCH REPAIRS SHALL BE BORNE BY THE CONTRACTOR.**

7. **ROADS, ROADWAYS, SIDEWALKS, CURB/GUTTERS, ROADSIDE DRAINAGE DITCHES, UNDERDRAINS, ETC. WHICH ARE DAMAGED OR DESTROYED BY CONSTRUCTION SHALL BE RESTORED TO A CONDITION AT LEAST EQUAL TO THAT PRIOR TO THE START OF CONSTRUCTION AT THE CONTRACTOR'S EXPENSE.**

8. **ALL AREAS DISTURBED WITHIN EASEMENTS AND RIGHT-OF-WAYS OR ON PRIVATE PROPERTY SHALL BE RESTORED TO A CONDITION OF AT LEAST EQUAL TO THAT WHICH EXISTED PRIOR TO THE START OF CONSTRUCTION. THE COST OF SUCH RESTORATION SHALL BE BORNE BY THE CONTRACTOR.**

9. **CONTRACTOR SHALL BE RESPONSIBLE TO PROVIDE TRAINED SAFETY PERSONNEL AND TO ENSURE THAT ALL CONSTRUCTION IS IN ACCORDANCE WITH THE STATE OCCUPATIONAL SAFETY LAWS (MOSHA).**

10. **IF THE PROJECT INVOLVES CONSTRUCTION WITHIN AN EXISTING STATE, COUNTY OR TOWN RIGHT-OF-WAY, THEN A TRAFFIC CONTROL PLAN SHALL BE INCLUDED IN THE CONSTRUCTION DRAWINGS AND A PERMIT MAY BE REQUIRED BY THE APPROPRIATE AGENCY. TRAFFIC CONTROL SHALL BE IN ACCORDANCE WITH THE LATEST EDITION OF THE MANUAL OF UNIFORM TRAFFIC CONTROL DEVICES.**

II. CONSTRUCTION DRAWINGS, SHOP DRAWINGS AND AS-BUILTS

1. **WATER CONSTRUCTION DRAWINGS SHALL SHOW A COMPLETE DESCRIPTION OF ALL WORK TO BE PERFORMED, IN ACCORDANCE WITH THE STANDARD SPECIFICATIONS. THE DRAWINGS MUST BE DEVELOPED IN SUFFICIENT DETAIL TO DEPICT THE IMPROVEMENTS AND THEIR SPATIAL RELATIONSHIP WITH BOTH**

EXISTING CONDITIONS AND PLANNED FUTURE IMPROVEMENTS. CONSTRUCTION DRAWINGS ARE TO BE SUBMITTED TO THE TOWN FOR REVIEW AND APPROVAL BY THE TOWN ADMINISTRATOR, TOWN ENGINEER, AND WATER SYSTEMS OPERATIONS DEPARTMENT. DRAWINGS ARE TO BE PREPARED BY AN ENGINEER LICENSED IN THE STATE OF MARYLAND. THE ENGINEER IS RESPONSIBLE FOR ADEQUATELY DESIGNING, DETAILING AND SPECIFYING ALL MATERIALS AND METHODS OF CONSTRUCTION NOT DESCRIBED IN THE STANDARD SPECIFICATIONS. THE PROFESSIONAL ENGINEER'S SEAL, ORIGINAL SIGNATURE, AND THE DATE OF THE SIGNATURE SHALL BE SHOWN ON ALL SHEETS OF THE CONSTRUCTION DRAWINGS.

THE SPECIFICATIONS PROVIDED HEREIN ARE PROVIDED TO ASSIST THE ENGINEER IN DESIGN OF THE PROJECT AND ARE INTENDED TO ADDRESS TOPICS THAT WILL HELP THE ENGINEER PERFORM MOST ENGINEERING TASKS IN AN EFFICIENT MANNER AND COMPLY WITH PRACTICES PREFERRED BY THE TOWN OF NORTH EAST. IT REMAINS THE ENGINEER'S RESPONSIBILITY TO EXERCISE PROFESSIONAL JUDGEMENT IN THE ACCEPTANCE OR USE OF THESE STANDARDS. DEVIATIONS FROM THE DESIGN STANDARDS WILL BE CONSIDERED ON A CASE BY CASE BASIS AT THE DISCRETION OF THE TOWN ENGINEER AND TOWN ADMINISTOR. THE TOWN'S APPROVAL OF THE CONSTRUCTION DRAWINGS DOES NOT RELIEVE THE ENGINEER OF RESPONSIBILITY FOR ERRORS OR OMISSIONS IN PREPARING THE DESIGN.

2. **CONTRACTOR SHALL SUBMIT TO THE TOWN ENGINEER THREE (3) COPIES OF SHOP DRAWINGS, CATALOG CUTS AND/OR CERTIFICATIONS OF THE MATERIAL AND EQUIPMENT AT LEAST FOUR (4) WEEKS PRIOR TO STARTING WORK.**
3. **AFTER THE WATER MAIN HAS BEEN TESTED AND DISINFECTED AND WATER SERVICES HAVE BEEN INSTALLED, THREE (3) SETS OF AS-BUILT DRAWINGS SHALL BE FORWARDED TO THE TOWN FOR REVIEW AND APPROVAL. ONCE THE APPROVAL OF AS-BUILT DRAWINGS HAS BEEN GRANTED BY TOWN ENGINEER AND THE TOWN'S WATER OPERATIONS DEPARTMENT SERVICES, THREE (3) SETS OF MYLAR ORIGINALS, EACH SHEET BOLDLY MARKED "AS-BUILT DRAWING", DATED AND SIGNED, ALONG WITH SEVEN (7) SETS OF PRINTS SHALL BE SUBMITTED TO THE TOWN. THE AS-BUILT DRAWINGS SHALL INDICATE ALL AS-BUILT CONDITIONS AND FIELD REVISIONS TO APPROVED CONSTRUCTION PLANS AND/OR SITE PLANS. NO OCCUPANCY PERMITS WILL BE APPROVED UNTIL AS BUILT DRAWINGS HAVE BEEN APPROVED BY THE TOWN ENGINEER.**
4. **UPON COMPLETION OF CONSTRUCTION AND PRIOR TO FINAL APPROVAL OF THE AS BUILT DRAWINGS, A WALK THROUGH INSPECTION MUST BE PERFORMED BY THE TOWN ENGINEER AND THE WATER SYSTEM OPERATIONS DEPARTMENT ACCOMPANIED BY THE CONTRACTOR TO VERIFY ALL VALVES ARE OPERATIONAL AND OPEN.**

III. MATERIALS

1. **WATER MAINS TO BE CONSTRUCTED OF DUCTILE IRON PIPE, ANSI A21.50 (AWWA C150) & ANSI A21.51 (AWWA C151) MINIMUM CLASS 51. FITTINGS SHALL BE CLASS 350 D.I.P. IN ACCORDANCE WITH AWWA C153. PIPE AND FITTINGS SHALL BE CEMENT MORTAR LINED AND COATED IN ACCORDANCE WITH AWWA C104 (ANSI A21.4)**

2. **WATER MAINS CONSTRUCTED OF HIGH DENSITY POLYETHYLENE (HDPE) PIPE MAY BE CONSIDERED FOR LONG RUNS OF MAIN OUTSIDE OF SUBDIVISIONS AND WHERE APPROPRIATE FOR HORIZONTAL DIRECTIONAL DRILLING INSTALLATION METHODS. THE DESIGNER SHALL SUBMIT A REQUEST TO THE TOWN ENGINEER IDENTIFYING PROPOSED LOCATION OF HDPE FOR REVIEW AND APPROVAL PRIOR TO SUBMITTAL OF DESIGN DRAWINGS. HDPE PIPE SHALL ADHERE TO THE LATEST VERSION OF ANSI/AWWA C906 WITH A MINIMUM PRESSURE CLASS OF 160 PSI, DR 11, AND SHALL BE LISTED AS MEETING NSF/ANSI-61. STANDARD 40-FOOT LENGHTS OF PIPE SHALL BE PROVIDED. PIPE JOINTS SHALL BE HEAT FUSED OR ELECTROFUSED (COUPLINGS ONLY) WITH ZERO LEAKAGE JOINTS. TRACING WIRE SHALL BE PLACED PARALLEL AND ABOVE, BUT SEPARATE FROM THE PIPE AND SHALL BE 10 AWG OR APPROVED EQUAL. FLANGES AND MECHANICAL JOINT ADAPTERS SHALL MEET AWWA C111/ANSI A21.11. PIPE COLOR SHALL BE BLACK WITH BLUE LETTERING OR A BLUE LINE ON THE PIPE.**

3. **WATER MAIN VALVES SHALL BE WATEROUS, U.S. PIPE METOSEAL 250, OR KENNEDY VALVE CO. KEN-SEAL II (NO SUBSTITUTIONS), RESILIENT SEATED VALVES. VALVES TO OPEN LEFT. VALVES SHALL HAVE ROADWAY BOXES EQUAL TO M&H E-2602.**

IV. WATER METERS

1. **FOR PURPOSES OF METERING, A SEPARATE STRUCTURE SHALL BE DEFINED AS 1) ANY SINGLE STANDING BUILDING OR OTHER STRUCTURE LOCATED ON A LOT, OR 2) ANY PORTION OF ANY SINGLE STANDING BUILDING OR STRUCTURE DIVIDED FROM WITHIN BY ONE OR MORE FIRE WALLS, WITH THE EXCEPTION OF APARTMENT BUILDINGS. EACH SEPARATE STRUCTURE, SO DEFINED AND CONTAINING DOMESTIC WATER FIXTURES, SHALL HAVE A SEPARATE SERVICE CONNECTION WITH A METER LOCATED AT THE PROPERTY LINE IMMEDIATELY INSIDE PROPERTY BOUNDARY.**

2. **THE 5/8-INCH AND 1-INCH METERS CALLED FOR IN THE STANDARD WATER DETAILS WILL BE FURNISHED AND INSTALLED BY THE TOWN OF NORTH EAST, ONCE THE METER VAULT AND SETTING MEETS WITH THEIR APPROVAL. (SEE STANDARD WATER DETAILS W-1 THRU W-5). METERS LARGER THAN 1-INCH SHALL BE FURNISHED AND INSTALLED BY THE CONTRACTOR AT NO EXPENSE TO THE TOWN. METERS LARGER THAN 1-INCH SHALL NOT BE PLACED IN SERVICE UNTIL THE METER VAULT, SERVICE LINE AND APPURTENANCES HAVE BEEN INSPECTED AND ACCEPTED BY THE TOWN OF NORTH EAST. THE TOWN WILL SHUT DOWN ANY SERVICE LINE PLACED IN SERVICE WITHOUT SUCH INSPECTION AND IT WILL REMAIN SHUT DOWN UNTIL SUCH TIME AS IT HAS BEEN INSPECTED, ANY CORRECTIONS MADE, AND ACCEPTED BY THE TOWN.**

3. **PRIOR TO INSTALLING METER SETTINGS /VAULTS, DEVELOPER/OWNER SHALL STAKE OUT THE RIGHT-OF-WAY LINE FOR EACH INDIVIDUAL METER IN ACCORDANCE WITH THE STANDARD DETAILS. ANY METER VAULT AND SETTING FOUND TO BE INCORRECTLY LOCATED SHALL BE RELOCATED TO ITS PROPER LOCATION BY THE CONTRACTOR. THE ENGINEER WILL DECIDE WHETHER OR NOT A NEW SERVICE TAP AND LINE ARE REQUIRED.**

4. **DOMESTIC WATER METERS SHALL NOT BE INSTALLED IN PAVED AREAS OR WITHIN 5-FEET OF PAVEMENT, CONCRETE SLABS OR OTHER STRUCTURES.**

5. **WHEREVER POSSIBLE, METER VAULTS SHALL NOT BE LOCATED IN AREAS SUBJECT TO FLOODING OR IN AREAS OF HIGH GROUNDWATER. ALL LARGE METER VAULTS SHALL BE DRAINED BY GRAVITY DRAINS. GRAVITY DRAINS SHALL NOT BE CONNECTED TO STORM DRAIN OR SANITARY SEWER STRUCTURES. VAULTS SHALL BE EQUIPPED WITH A FLOOR DRAIN WITH BACKWATER VALVE (JOSAM SERIES 67103A OR APPROVED EQUAL) CAST IN THE BOTTOM SLAB TO DRAIN THE SUMP. A 3-INCH MIN. DIAMETER SCHEDULE 80 PVC GRAVITY DRAIN PIPE SHALL EXTEND ON A CONSTANT SLOPE TO THE GROUND SURFACE AS APPROVED BY THE TOWN ENGINEER. VAULT DRAIN SHALL BE SHOWN ON THE UTILITY PLAN WITHIN PROPOSED 15-FT. WIDE PERMANENT UTILITY EASEMENT.**

6. **NO WATER METER SHALL BE INSTALLED UNTIL PROPOSED ROADWAY REPAIR PATCH HAS BEEN APPROVED BY THE NORTH EAST MAINTENANCE SUPERVISOR. ROADWAY REPAIR FOR IN-TOWN PROJECTS SHALL BE PER TOWN OF NORTH EAST STANDARD ROAD DETAIL RD-3.**

V. FIRE HYDRANTS

1. **FIRE HYDRANTS SHALL BE WATEROUS PACER MODEL OR KENNEDY GUARDIAN K81 (NO SUBSTITUTIONS). HYDRANTS TO OPEN LEFT. OUTSIDE OF HYDRANTS TO BE FIELD PAINTED WITH 2 COATS OF APPROVED YELLOW OMAHA PAINT. A 36-INCH HIGH BY 24-INCH WIDE "H" SHALL BE INSTALLED IN THE ROADWAY OPPOSITE THE HYDRANT USING FLUORESCENT YELLOW TRAFFIC PAINT. ALL FIRE HYDRANTS SHALL HAVE MUELLER UNIVERSAL HYDRANT LOCKS INSTALLED TO THE SATISFACTION OF THE TOWN ENGINEER. PADLOCKS ONLY SHALL BE OBTAINED FROM THE TOWN'S WATER OPERATIONS DEPARTMENT AND INSTALLED BY THE DEVELOPER UNDER THE SUPERVISION OF THE TOWN ENGINEER. PADLOCKS COST SHALL BE REIMBURSED TO TOWN BY THE DEVELOPER/OWNER.**

2. **FIRE HYDRANTS SHALL BE INSTALLED AT A SPACING NOT TO EXCEED FIVE HUNDRED (500) FEET BETWEEN HYDRANTS AND NO GREATER THAN 500 FEET FROM A BUILDING IN ACCORDANCE WITH THE CURRENT EDITION OF NFPA 1141. THE NORTH EAST FIRE DEPARTMENT OR TOWN ENGINEER MAY DETERMINE THAT CLOSER FIRE HYDRANT SPACING IS REQUIRED. A FIRE HYDRANT SHALL BE INSTALLED AT THE END OF THE WATER MAIN.**

3. **THE NORTH EAST FIRE DEPARTMENT SHALL APPROVE THE LOCATION OF ALL FIRE HYDRANTS.**

4. **IN RESIDENTIAL AREAS, FIRE HYDRANTS SHALL BE SUPPLIED BY NOT LESS THAN SIX (6) INCH DIAMETER MAIN INSTALLED ON A LOOPED SYSTEM OR BY NOT LESS THAN AN EIGHT (8) INCH DIAMETER MAIN IF THE SYSTEM IS NOT LOOPED OR THE FIRE HYDRANT IS INSTALLED ON A DEAD-END MAIN EXCEEDING THREE HUNDRED (300) FEET IN LENGTH.**

5. **DEAD-END MAINS SHALL NOT EXCEED SIX HUNDRED (600) FEET IN LENGTH FOR THE MAIN SIZES LESS THAN TEN (10) INCHES IN DIAMETER.**

6. **A WATER SUPPLY FOR FIRE PROTECTION, EITHER TEMPORARY OR PERMANENT, SHALL BE MADE AVAILABLE AS SOON AS COMBUSTIBLE MATERIAL ACCUMULATES ON SITE.**

7. **THERE SHALL BE NO DELAY IN THE INSTALLATION OF FIRE PROTECTION EQUIPMENT.**

8. **WHERE WATER MAINS AND FIRE HYDRANTS ARE TO BE PROVIDED, THEY SHALL BE INSTALLED, COMPLETED, AND IN SERVICE PRIOR TO CONSTRUCTION WORK. UPON INSTALLATION, FIRE HYDRANTS SHALL BE COVERED WITH ORANGE FIRE HYDRANT BAGS MARKED WITH WORDS "NOT IN SERVICE", UNTIL THEY ARE CHARGED. FIRE HYDRANTS ARE NOT TO BE CHARGED UNTIL HYDRANT LOCKING DEVICES ARE ON SITE. UPON CHARGING, THE CONTRACTOR IS TO INSTALL THE LOCKING DEVICES AND CONTACT THE TOWN WATER OPERATIONS DEPARTMENT FOR INSTALLATION OF PADLOCKS. ONCE CHARGED, FIRE HYDRANTS SHALL REMAIN IN SERVICE AND LOCKED AT ALL TIMES.**

VI. CLEARANCES

1. **WATER MAINS, SERVICE LINES AND WATER METERS SHALL BE FIVE (5) FEET CLEAR OF ANY OTHER STRUCTURE OR OBJECT (E.G. TRANSFORMERS, CONCRETE FOUNDATIONS, PADS, CURBS AND GUTTERS, DRIVEWAYS, SIDEWALKS, SUPPORTS FOR MAIL BOXES, LIGHT AND POWER POLES, TREES, BUS STOPS, ETC.). IN CASE OF CONFLICT, OWNER SHALL RELOCATE THE WATER MAIN OR OBSTRUCTION TO OBTAIN THE PROPER CLEARANCE, AS APPROVED BY THE TOWN ENGINEER.**

2. **CLEARANCE SHALL BE MEASURED BETWEEN OUTSIDE OF PIPES. WHERE SPECIFIED CLEARANCE BETWEEN WATER MAIN AND SANITARY SEWER CANNOT BE OBTAINED, SEWER SHALL BE ENCASED IN CONCRETE 10-FEET EACH SIDE OF WATER MAIN. DESIGNERS SHALL INVESTIGATE CLEARANCE BETWEEN WATER MAIN AND OTHER UTILITIES, BOTH EXISTING AND FUTURE.**

3. **THE RECOMMENDED CLEARANCES SHALL BE AS FOLLOWS:**

   A. **WATER MAINS CROSSING SEWERS:**

      SEWERS SHALL HAVE A MINIMUM CLEARANCE OF 12-INCHES BELOW WATER MAIN.

   B. **WATER MAINS PARALLEL TO SEWER:**

      WHERE SEWER AND WATER MAIN ARE LESS THAN 10-FEET APART, SEWER SHALL BE 6-FEET BELOW WATER MAIN. WHERE 10 OR MORE FEET APART, SEWER SHALL BE BELOW WATER MAIN.

   C. **WATER MAIN AND SERVICE LINES CROSSING OTHER UTILITIES:**
      A MINIMUM OF 12-INCHES VERTICAL CLEARANCE AND 3-FEET HORIZONTAL CLEARANCE FROM STORM DRAINS, GAS MAINS, PARALLEL ELECTRIC CONDUITS OR CABLES, TELEPHONE LINES ETC.

   D. **MAINTAIN MINIMUM 10-FEET HORIZONTAL CLEARANCE BETWEEN**

WATER AND SEWER SERVICE CONNECTIONS. SEWER SERVICE SHALL BE ON LOW SIDE OF LOT AND BELOW WATER SERVICE. HORIZONTAL CLEARANCE BETWEEN WATER AND SEWER SERVICE CONNECTIONS MAY BE REDUCED TO 7 FEET IN TOWNHOUSE DEVELOPMENTS WITH THE APPROVAL OF THE TOWN ENGINEER.

VII. CONSTRUCTION

1. **WATER MAINS TO HAVE MINIMUM OF 3.5 FT COVER EXCEPT WHERE GREATER DEPTHS ARE INDICATED. ANY WATER MAINS DEEPER THAN 6 FEET IN DEPTH WILL BE SUBJECT TO THE APPROVAL OF THE TOWN ENGINEER.**

2. **SEE STANDARD DETAIL W-8 FOR PIPE TRENCH DETAILS.**

3. **ALL EXISTING PAVING SHALL BE SAW-CUT ALONG BOTH SIDES OF TRENCH PRIOR TO REMOVAL.**

4. **ALL EXCAVATED BITUMINOUS OR CONCRETE PAVING MATERIAL SHALL BE REMOVED OFF SITE AND SHALL NOT BE USED IN BACKFILL.**

5. **SUITABILITY OF EXCAVATED MATERIAL FOR BACKFILL WILL BE DETERMINED BY THE ENGINEER.**

6. **BACKFILL FOR WATER MAIN SHALL BE COMPACTED WITH SELECT MATERIAL AS DIRECTED BY THE TOWN ENGINEER TO ONE-FOOT ABOVE THE PIPE, UNLESS OTHERWISE REQUIRED BY THE APPROVED CONTRACT DOCUMENTS FOR THE PROJECT. FULL TRENCH COMPACTION REQUIRED IN ALL EXCAVATIONS WITHIN ROAD RIGHT-OF-WAYS. COMPACTION TESTS SHALL BE REQUIRED AT LEAST EVERY 200-FT. OF TRENCH AT ELEVATIONS DIRECTED BY THE TOWN'S INSPECTOR. COMPACTION IN TOWN ROADS SHALL BE 95% OF MAXIMUM DENSITY, USING THE MODIFIED PROCTOR METHOD.**

7. **IN FILL AREAS, CONTRACTOR SHALL CONSTRUCT COMPACTED EMBANKMENT TO SUBGRADE AND THEN EXCAVATE PIPE TRENCH.**

8. **THREE INCH (3”) NONMETALLIC TAPE MANUFACTURED BY ALLEN SYSTEMS, OR APPROVED EQUAL, TO BE INSTALLED 18” ABOVE ALL WATER MAINS AND HOUSE SERVICES.**

9. **TRENCHES IN STATE AND COUNTY ROADS SHALL BE COMPACTED AND REPAVED AS REQUIRED BY THAT AGENCY.**

10. **ALL VALVE BOXES, METER PITS, ETC. SHALL BE SET FLUSH WITH FINISHED GRADE. ROUGH GRADING SHALL BE COMPLETED PRIOR TO INSTALLING METER SETTINGS.**

11. **ALL WATER SERVICE TAPS SHALL BE MADE AFTER THE MAIN HAS BEEN APPROVED AND PERMANENTLY ACTIVATED. NO DRY TAPS PERMITTED. MINIMUM SPACING BETWEEN SERVICE TAPS ALONG THE WATER MAIN SHALL BE 24 INCHES.**

VIII. ABANDONMENTS

1. **ABANDONMENTS OF WATER SERVICES SHALL INCLUDE REMOVING THE SERVICE AT THE MAIN. ANY INFORMATION REGARDING THE LOCATION OF EXISTING UNDERGROUND UTILITIES PROVIDED BY THE TOWN OF NORTH EAST OR THEIR REPRESENTATIVES IS PROVIDED FOR THE CONVENIENCE OF THE CONTRACTOR AND IS PROVIDED TO THE BEST OF THE TOWN'S/REPRESENTATIVE'S KNOWLEDGE. THE TOWN AND/OR THEIR REPRESENTATIVE DOES NOT WARRANT THE ACCURACY OF THE INFORMATION PROVIDED AND WILL NOT BE RESPONSIBLE FOR ANY COSTS OR FEES INCURRED AS A RESULT OF THE INFORMATION PROVIDED. PRIOR TO BEGINNING CONSTRUCTION, IT IS THE CONTRACTOR'S RESPONSIBILITY TO TEST PIT TO IDENTIFY THE ACTUAL LOCATION OF BURIED UTILITIES.**

2. **ABANDONMENTS SHALL BE INSPECTED BY THE TOWN'S WATER OPERATIONS DEPARTMENT AND/OR THE TOWN ENGINEER.**

3. **ALL AREAS DISTURBED DURING THE ABANDONMENT SHALL BE RESTORED TO A CONDITION OF AT LEAST EQUAL TO THAT WHICH EXISTED PRIOR TO THE START OF CONSTRUCTION. THE COST OF SUCH RESTORATION SHALL BE BORNE BY THE CONTRACTOR.**

4. **ABANDONMENTS OF WELLS WILL BE SUBJECT TO HEALTH DEPARTMENT REQUIREMENTS.**

IX. INSPECTION

1. **THE TOWN ENGINEER WILL INSPECT ALL WORK, INCLUDING SERVICE LINES WITHIN SUBDIVISIONS, AND SHALL BE GIVEN AT LEAST FIVE (5) BUSINESS DAYS NOTICE VIA FAX 410-838-1811, WITH COPY TO TOWN, PRIOR TO THE INITIATION OF THE FOLLOWING ITEMS OF WORK:**

   A. **STARTING OR RESTARTING PIPE INSTALLATION.**

   B. **PRIOR TO PRESSURE TESTING.**

   C. **WHEN LINES ARE READY TO TEST FOR COMPLIANCE WITH SUPERCHLORINATION REQUIREMENTS.**

   D. **AFTER FLUSHING TO TEST FOR COMPLIANCE WITH CHLORINE RESIDUAL REQUIREMENTS.**

   E. **WHEN WATER SAMPLE(S) ARE TO BE TAKEN FOR BACTERIA TEST.**

   F. **SERVICE LINES FROM THE CORPORATION TO THE METER VAULT. SERVICE LINES SHALL BE INSPECTED UNDER WORKING PRESSURE PRIOR TO BACKFILLING AND MUST BE SIGNED OFF ON AND SENT TO THE TOWN OF NORTH EAST PRIOR TO BEING ACCEPTED OR METER INSTALLED.**

2. **ALL SERVICE LINES NOT WITHIN A SUBDIVISION SHALL BE INSPECTED BY THE TOWN'S WATER OPERATIONS DEPARTMENT SERVICES. THE REQUEST FOR INSPECTION BY THE TOWN'S WATER OPERATIONS DEPARTMENT**

SHALL BE SENT VIA FAX 410-287-9355 TO THE TOWN. ALL SERVICE LINES SHALL BE INSPECTED UNDER WORKING PRESSURE PRIOR TO BACKFILLING. THE TOWN SHALL BE GIVEN AT LEAST FIVE (5) BUSINESS DAYS PRIOR NOTICE VIA FAX 410-287-8267 TO ARRANGE FOR THE INSPECTION.

3. **ANY CONSTRUCTION WORK REQUIRED PURSUANT TO THE APPROVED SITE PLAN, SUBDIVISION, PUBLIC WORKS AGREEMENT AND/OR WATER SERVICE AGREEMENT WHICH IS CONSTRUCTED OR INSTALLED WITHOUT THE TOWN INSPECTOR'S APPROVAL SHALL BE REMOVED AND REPLACED, WHETHER IT MEETS THE REQUIREMENTS OR NOT.**

X. WATER PRESSURE

1. **FOR PRESSURE REDUCTION REQUIREMENTS ON DOMESTIC SERVICES, SEE STANDARD DETAILS W-2, W-4 AND W-5. PRESSURE REDUCTION FOR COMMERCIAL/ INDUSTRIAL SERVICES SHALL BE AS APPROVED BY THE TOWN. INSIDE PRESSURE REDUCING VALVE (PRV) MAINTENANCE SHALL BE HOMEOWNER RESPONSIBILITY.**

2. **WATER MAIN WORKING PRESSURE: _____ PSI.**

   STATIC @ EL.: _____

   TEST PRESSURE: _____PSI.

XI. TESTS AND DISINFECTION

1. **TO DISINFECT WATER MAINS, THE MAINS SHALL BE CHARGED WITH A SOLUTION CONTAINING SUFFICIENT CHLORINE SUCH THAT AT LEAST 25 PARTS PER MILLION (PPM) OF RESIDUAL CHLORINE IS MAINTAINED FOR A PERIOD OF 24 HOURS. CHLORINE RESIDUAL AFTER FLUSHING SHALL NOT EXCEED 3.5 PPM. CONTRACTOR SHALL HAVE MARYLAND LICENSED LABORATORY TAKE WATER SAMPLES AFTER FLUSHING, AT LOCATIONS DIRECTED BY THE TOWN ENGINEER, TO BE TESTED FOR BACTERIA. RESULTS SHALL BE CERTIFIED BY A STATE LICENSED LABORATORY AND SUBMITTED TO THE TOWN ENGINEER.**

2. **CONNECTION TO THE EXISTING WATER MAIN SHALL NOT BE INITIATED UNTIL THE NEW MAIN HAS BEEN PRESSURE TESTED, CHLORINATED AND FLUSHED TO THE TOWN ENGINEER'S SATISFACTION AND THE BACTERIA TESTS ARE APPROVED BY THE TOWN ENGINEER. TEST PRESSURE SHALL BE MAINTAINED FOR A MINIMUM OF ONE-HALF HOUR. ANY TEMPORARY CONNECTION TO THE EXISTING MAIN FOR TEST/FLUSHING WATER SHALL RECEIVE THE ENGINEER'S PRIOR APPROVAL AND SHALL BE DISCONNECTED IMMEDIATELY AFTER USE. SUPERCHLORINATED WATER SHALL BE DISPOSED OF IN ACCORDANCE WITH CECIL COUNTY REQUIREMENTS.**

XII. UTILITY EASEMENTS

1. **A 15-FT. WIDE MINIMUM PERMANENT UTILITY EASEMENT SHALL BE PROVIDED ALONG THE FRONT OF EACH RESIDENTIAL, COMMERCIAL OR INDUSTRIAL PROPERTY TO BE SERVED WITH TOWN WATER FOR TOWN ACCESS TO METERS, FIRE HYDRANTS, AND SERVICE CONNECTIONS TO METERS INSTALLED ON PRIVATE PROPERTY. UTILITY EASEMENT SHALL BE CONFIGURED SUCH THAT THE EASEMENT LINE SHALL BE NOT LESS THAN 7.5-FT. BEHIND THE CENTERLINE OF ANY METER OR FIRE HYDRANT. METERS SHALL BE LOCATED 5-FT. CLEAR OF SIDEWALKS, PAVEMENT, CURBS, ETC.**

2. **PERMANENT UTILITY EASEMENTS FOR WATER MAINS SHALL BE 20-FT. WIDE CENTERED ON THE PIPE, AND SHALL BE CONFIGURED SUCH THAT THE EASEMENT LINE SHALL BE NOT LESS THAN 7.5-FT. BEHIND THE CENTERLINE OF ANY FIRE HYDRANT, AND 10-FT. CLEAR AROUND ANY VAULT.**

3. **PERMANENT UTILITY EASEMENTS SHALL BE DEDICATED (BY RECORDED DEED) TO THE TOWN. UTILITY EASEMENTS WITHIN THE TOWN BOUNDARY SHALL BE SHOWN ON THE PRELIMINARY AND FINAL PLATS AND ON THE CONTRACT DRAWINGS, AND SHALL BE DEED RESTRICTED. UTILITY EASEMENTS OUTSIDE THE TOWN BOUNDARY SHALL BE PLATTED WITH METES AND BOUNDS AND ACCOMPANIED BY A WRITTEN DESCRIPTION SUBMITTED TO THE TOWN FOR APPROVAL AND PREPARATION OF AN EASEMENT AGREEMENT. ALL PLATS SHALL BE DULY RECORDED AT THE COUNTY COURT HOUSE.**

4. **FOR AN EXISTING SINGLE RESIDENTIAL HOOKUP, A WRITTEN EASEMENT AGREEMENT WILL BE REQUIRED AND WILL BE RECORDED BY THE TOWN OF NORTH EAST.**

XIII. ROADWAY REPAVING

1. **ANY PAVING DAMAGED DURING CONSTRUCTION BEYOND THE LIMIT OF STANDARD ROADWAY REPAVING SHALL BE REMOVED BY SAW-CUTTING IN NEAT LINES WITH RIGHT-ANGLE CORNERS AROUND DAMAGED AREAS, AND REPAIRS SHALL COMPLY WITH STANDARD ROAD DETAIL RD-3 FOR TOWN ROADS.**

2. **FOR TEMPORARY PAVING OF EXCAVATIONS IN TOWN ROADWAY, SEE STANDARD WATER DETAIL W-8.**

3. **FOR PERMANENT REPAVING OF EXCAVATIONS IN TOWN ROADWAY, SEE STANDARD ROAD DETAIL RD-3.**

   A MINIMUM OF 60 DAYS WILL BE REQUIRED BETWEEN TEMPORARY AND PERMANENT REPAVING, UNLESS OTHERWISE PERMITTED BY THE ENGINEER.

XIV. RESIDENTIAL SPRINKLER PROGRAM

ALL NEW RESIDENTIAL CONSTRUCTION OF NEW OR REPLACEMENT SINGLE FAMILY DWELLINGS, TWO-FAMILY DWELLINGS, MULTIPLE-FAMILY DWELLINGS AND DUPLEXES, CONSTRUCTED ON EXISTING OR PROPOSED SUBDIVISION LOTS WITHIN THE TOWN OF NORTH EAST, AND THOSE LOTS LOCATED OUTSIDE THE TOWN LIMITS BUT SERVICED BY THE TOWN'S WATER SYSTEM, INCLUDING NEW OR REPLACEMENT ACCESSORY DWELLING UNITS WHICH ARE CONSTRUCTED ON THE SAME PARCEL/LOT AS A NEW OR REPLACEMENT SINGLE FAMILY DWELLING, TWO FAMILY DWELLING, MULTIPLE FAMILY DWELLING OR A DUPLEX, SHALL BE REQUIRED TO INSTALL AN INTERIOR AUTOMATIC FIRE SPRINKLER SYSTEM IN ACCORDANCE WITH THE PROVISIONS OF ORDINANCE 2007-04-01, AND AS AMENDED FROM TIME TO TIME. A COPY OF ORDINANCE 2007-04-01, AND AS AMENDED, MAY BE OBTAINED FROM NORTH EAST TOWN HALL BY CONTACTING (410) 287-5801. THE SYSTEM SHALL BE INSTALLED AND MAINTAINED IN ACCORDANCE WITH THE LATEST STANDARDS PROMULGATED BY THE NATIONAL FIRE PROTECTION ASSOCIATION (NFPA), AS MAY BE MODIFIED, ADOPTED AND AMENDED BY THE MARYLAND FIRE PREVENTION CODE.

APPROVED BY: The Mayor and Commissioners of the Town of North East

DATE APPROVED: _____

EFFECTIVE: July 1, 2015

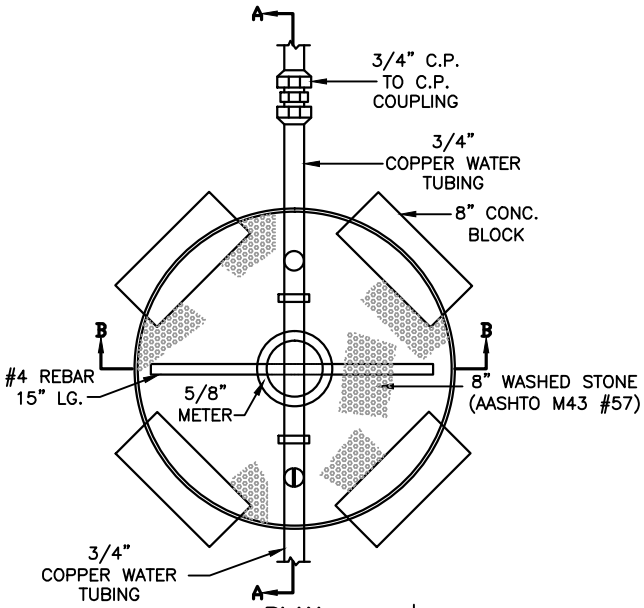

PLAN

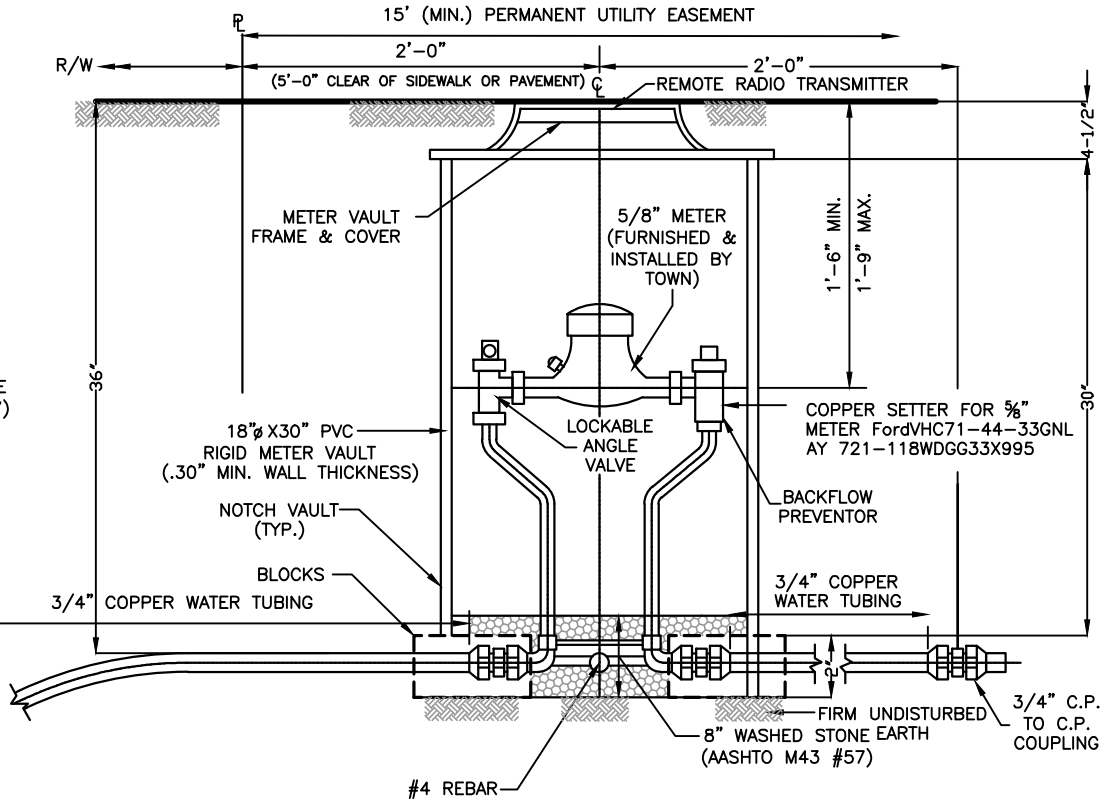

SECTION A-A

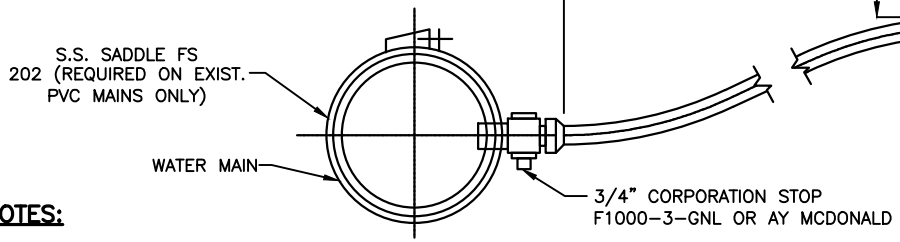

NOTES:

1. LOCATE METER VAULT IN LEVEL GRASS AREA IMMEDIATELY INSIDE PROPERTY BOUNDARY LINE. DO NOT LOCATE IN DRIVEWAYS, SHOULDER AREAS, OR DITCHES. COVERS SHALL BE FLUSH WITH FINISHED GROUND.
2. WATER TUBING SHALL BE TYPE 'K' COPPER WITH GRIP JOINT RED BRASS COUPLINGS. CATALOG NUMBERS REFER TO FORD METER BOX COMPANY. EQUIVALENT AY MCDONALD COUPLINGS ARE ACCEPTABLE (REFER TO FORD CROSS REFERENCE CHART).
3. METER VAULT FRAME AND COVER TO BE FORD FRAME FC-52, POLYMER LID 16.25 PWTHhN NICOR EXT-1 (24x18) AND REMOTE RADIO TRANSMITTER.
4. METER VAULT SHALL BE CARSON 18-30B BODY, OR CONCRETE.
5. OWNERS SHALL BE RESPONSIBLE FOR INSTALLING TANKS ON DOMESTIC HOT WATER HEATERS IN ADDITION TO RELIEF VALVES, AND SHALL CERTIFY THE INSTALLATION IN WRITING TO THE TOWN PRIOR TO INSTALLATION OF METERS BY THE TOWN AND ISSUANCE OF OCCUPYING PERMITS.
6. WHERE MORE THAN ONE METER SERVES MULTIPLE UNITS, EACH METER SHALL BE TAGGED WITH A STAMPED BRASS TAG INDICATING THE UNIT NUMBER IT SERVES.
7. PRESSURE REDUCING VALVE (PRV) MAY BE REQUIRED (SEE STD. W-5). WHEN REQUIRED, OWNER SHALL CERTIFY IN WRITING TO THE TOWN THAT PRV HAS BEEN INSTALLED AFTER HOUSE VALVE, PRIOR TO METER INSTALLATION BY TOWN AND ISSUANCE OF OCCUPANCY PERMITS.
8. SEE WATER INSTALLATION SPECIFICATIONS FOR UTILITY EASEMENT AND CLEARANCE TO BE PROVIDED.
9. NOT FOR NEW RESIDENTIAL CONSTRUCTION SEE W-3/W-4.

EXISTING DWELLING – NO SPRINKLER

TOWN OF NORTH EAST
INCORPORATED 1850

APPROVED: MAY 25, 2016
DATE

MAYOR AND COMMISSIONERS

STANDARD WATER DETAILS

STANDARD INSTALLATION 3/4" WITH 5/8" METER SERVICE

W-1

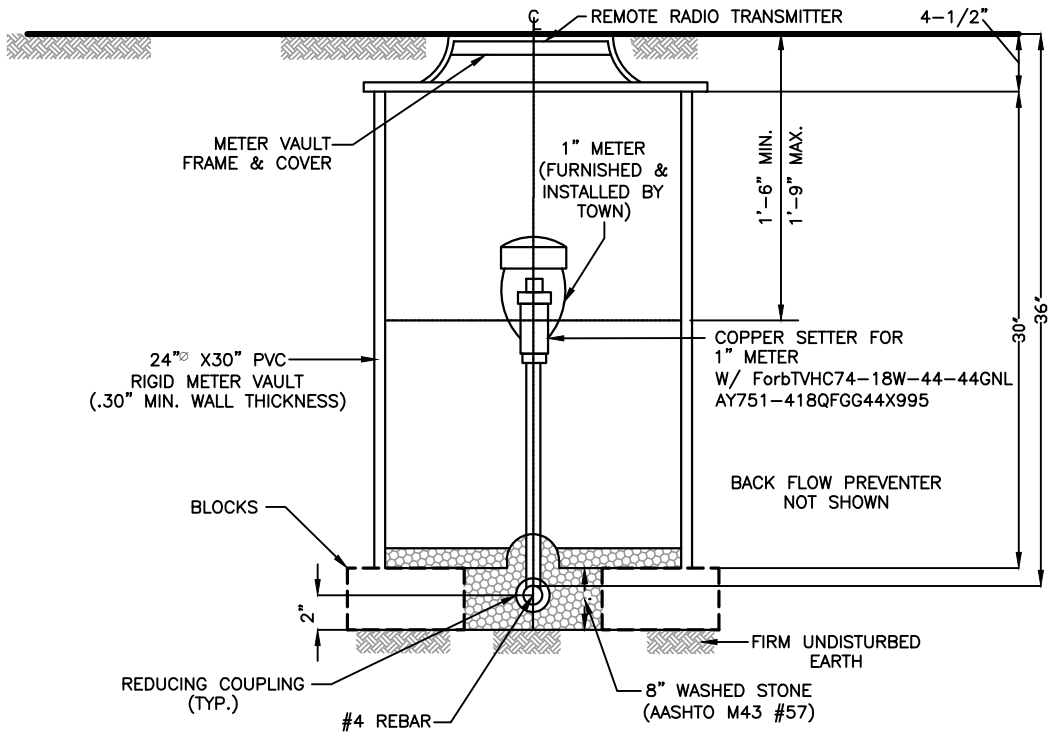

SECTION B-B

EXISTING DWELLING – NO SPRINKLER

APPROVED: MAY 25, 2016
DATE

MAYOR AND COMMISSIONERS

STANDARD WATER DETAILS

STANDARD INSTALLATION 3/4" WITH 5/8" METER SERVICE

W-1

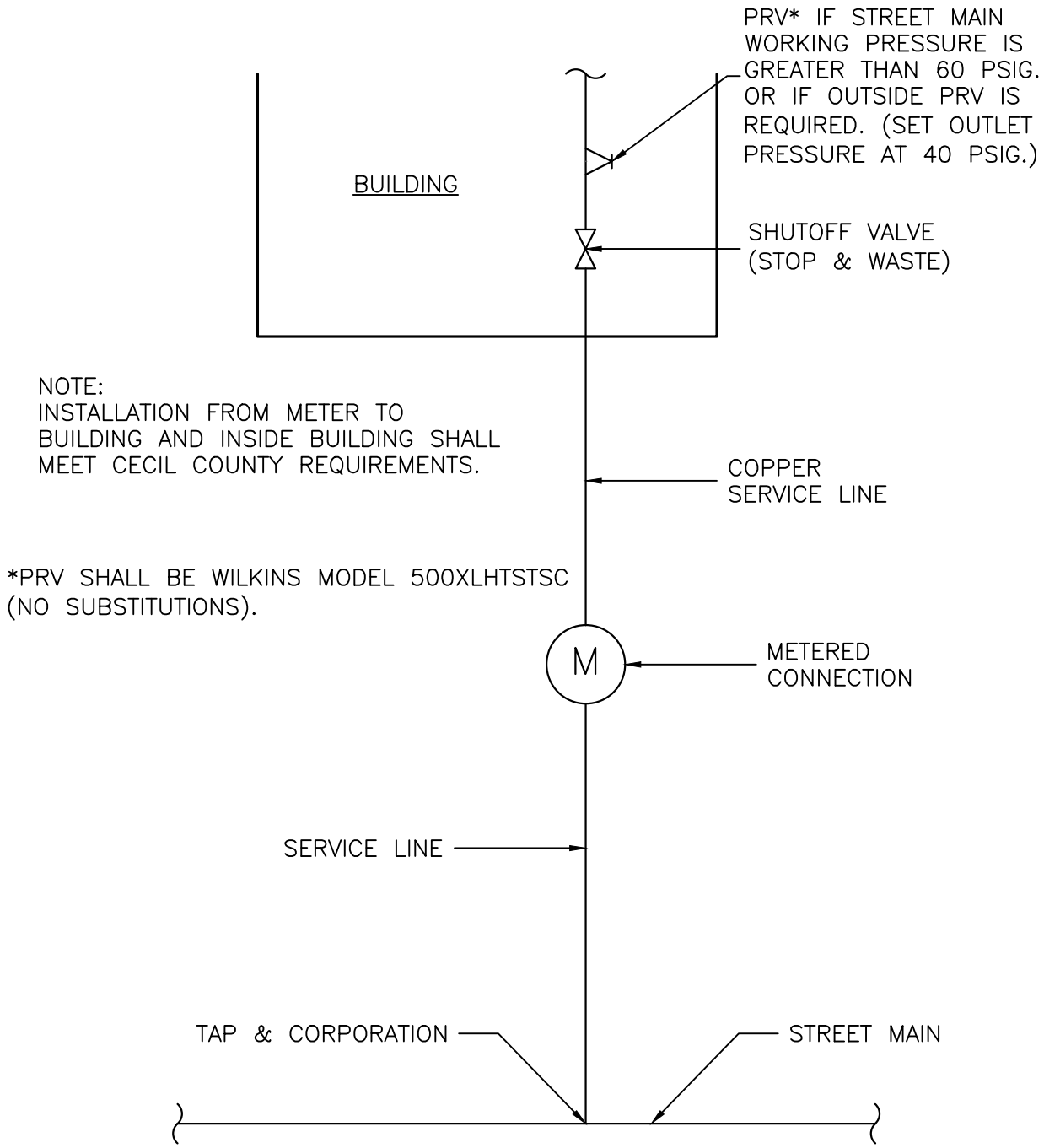

WATER SERVICE DIAGRAM

PRV = PRESSURE REDUCING VALVE

TOWN OF NORTH EAST INCORPORATED 1850	MAY 25, 2016 DATE MAYOR AND COMMISSIONERS	STANDARD WATER DETAILS STANDARD INSTALLATION 3/4" WITH 5/8" METER SERVICE	W-1 3 OF 3

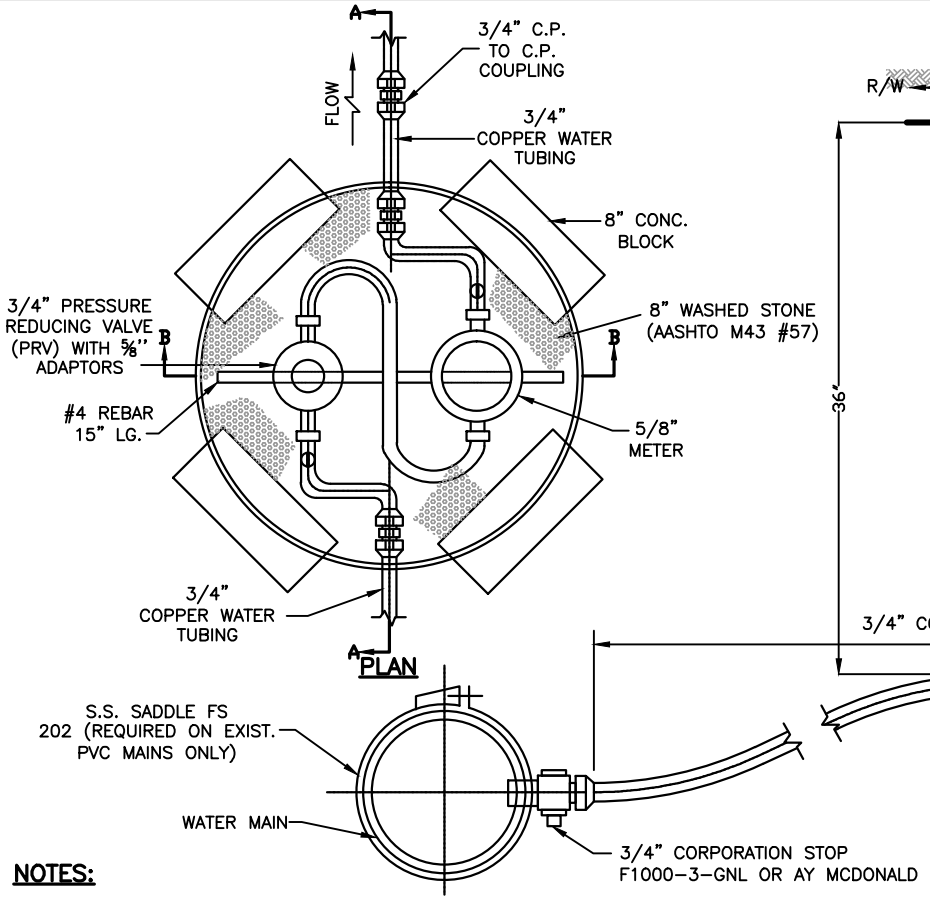

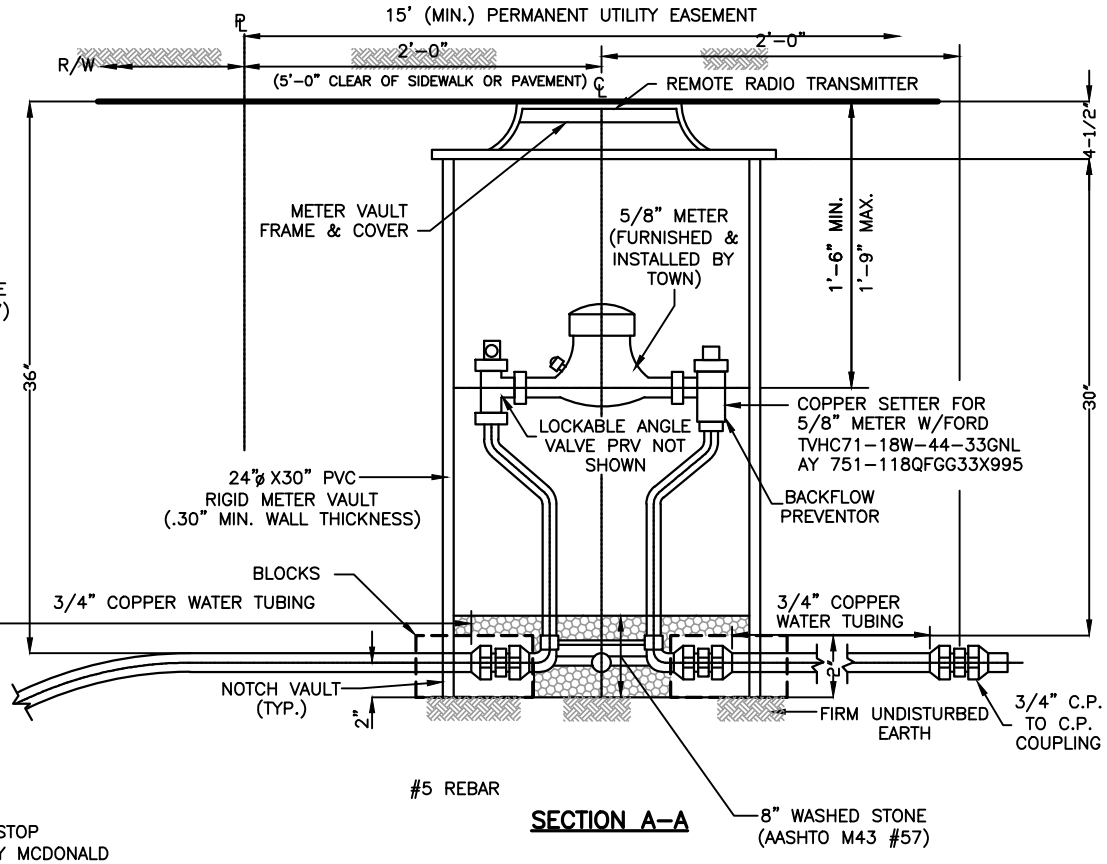

NOTES:

1. LOCATE METER VAULT IN LEVEL GRASS AREA IMMEDIATELY INSIDE PROPERTY BOUNDARY LINE. DO NOT LOCATE IN DRIVEWAYS, SHOULDER AREAS, OR DITCHES. COVERS SHALL BE FLUSH WITH FINISHED GROUND.
2. WATER TUBING SHALL BE TYPE 'K' COPPER WITH GRIP JOINT RED BRASS COUPLINGS. CATALOG NUMBERS REFER TO FORD METER BOX COMPANY. EQUIVALENT AY MCDONALD COUPLINGS ARE ACCEPTABLE (REFER TO FORD CROSS REFERENCE CHART).
3. METER VAULT FRAME AND COVER TO BE FORD FRAME FC-52 POLYMER LID 16.25P WATHhN NICOR, EXT-1 (24x18) AND REMOTE RADIO TRANSMITTER.
4. INSIDE AND OUTSIDE PRV SHALL BE WILKINS MODEL 500XLHTSTSC (NO SUBSTITUTIONS). OWNER SHALL CERTIFY IN WRITING TO THE TOWN THAT PRV HAS BEEN INSTALLED AFTER HOUSE VALVE INSIDE, PRIOR TO METER INSTALLATION BY TOWN AND ISSUANCE OF OCCUPANCY PERMITS.
5. METER VAULT SHALL BE CARSON 24-30B BODY, OR CONCRETE.
6. OWNERS SHALL BE RESPONSIBLE FOR INSTALLING TANKS ON DOMESTIC HOT WATER HEATERS IN ADDITION TO RELIEF VALVES, AND SHALL CERTIFY THE INSTALLATION IN WRITING TO THE TOWN PRIOR TO INSTALLATION OF METERS BY THE TOWN AND ISSUANCE OF OCCUPYING PERMITS.
7. WHERE MORE THAN ONE METER SERVES MULTIPLE UNITS, EACH METER SHALL BE TAGGED WITH A STAMPED BRASS TAG INDICATING THE UNIT NUMBER IT SERVES.
8. SEE WATER INSTALLATION SPECIFICATIONS FOR UTILITY EASEMENT AND CLEARANCE TO BE PROVIDED.
9. NOT FOR NEW RESIDENTIAL CONSTRUCTION SEE W-3/W-4.

EXISTING DWELLING – NO SPRINKLER

TOWN OF NORTH EAST INCORPORATED 1850

APPROVED: MAY 25, 2016
DATE

MAYOR AND COMMISSIONERS

STANDARD WATER DETAILS

STANDARD INSTALLATION 3/4" DOMESTIC SERVICE WITH 5/8" METER (W/ TANDEM PRV)

W-2

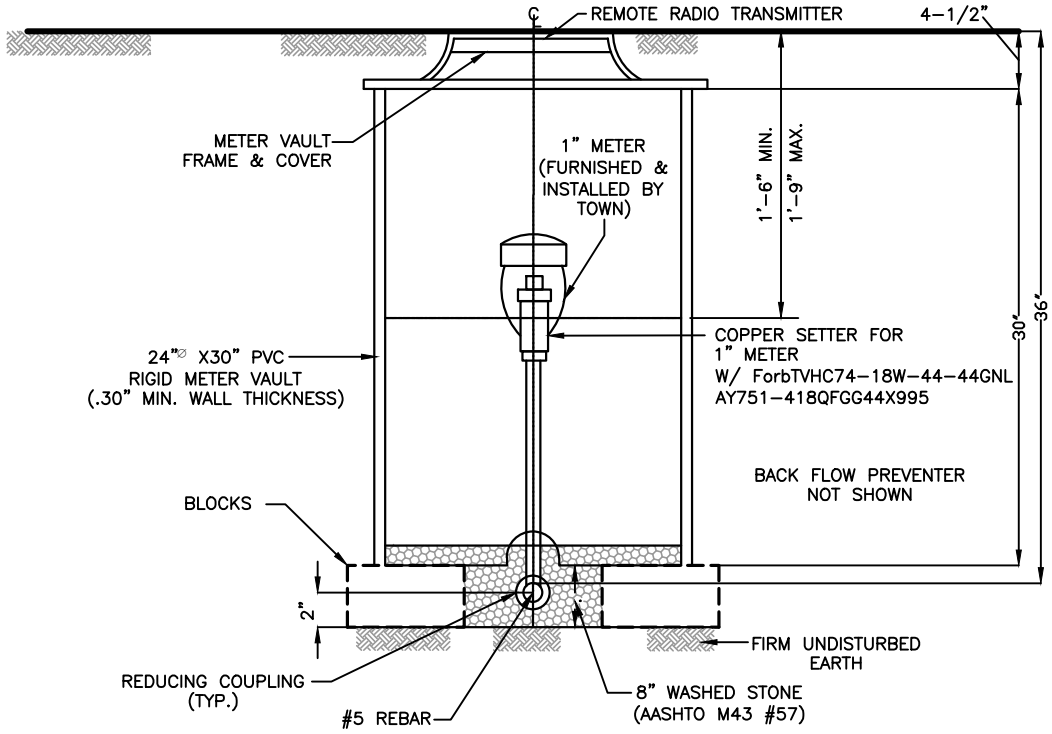

SECTION B-B

EXISTING DWELLING – NO SPRINKLER

TOWN OF NORTH EAST INCORPORATED 1850	APPROVED: MAY 25, 2016 DATE MAYOR AND COMMISSIONERS	STANDARD WATER DETAILS STANDARD INSTALLATION 3/4" DOMESTIC SERVICE WITH 5/8" METER (W/ TANDEM PRV)	W-2 2 OF 3

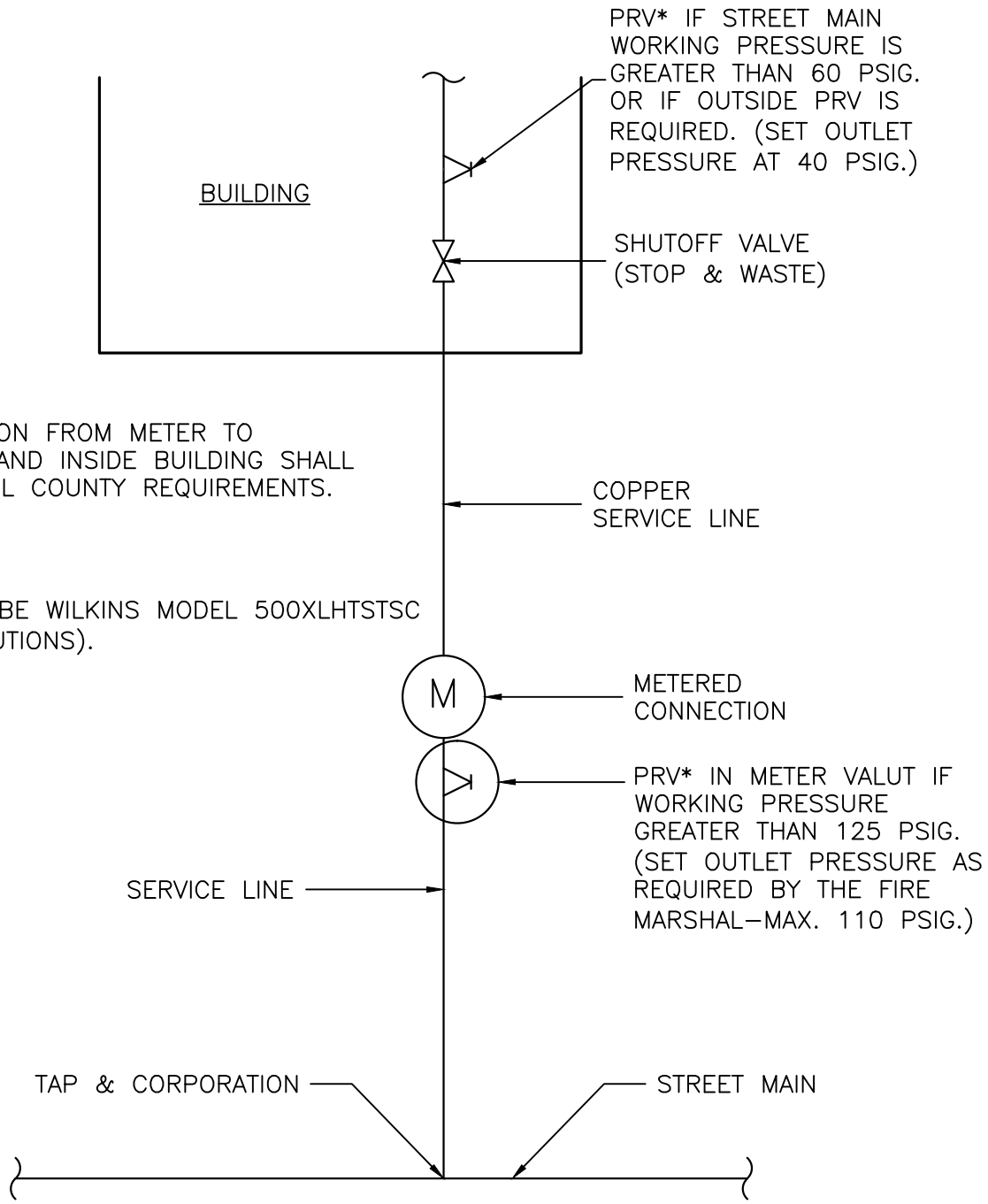

NOTE:
INSTALLATION FROM METER TO BUILDING AND INSIDE BUILDING SHALL MEET CECIL COUNTY REQUIREMENTS.

*PRV SHALL BE WILKINS MODEL 500XLHTSTSC (NO SUBSTITUTIONS).

WATER SERVICE DIAGRAM

PRV = PRESSURE REDUCING VALVE

TOWN OF NORTH EAST INCORPORATED 1850	MAY 25, 2016 DATE MAYOR AND COMMISSIONERS	STANDARD WATER DETAILS **STANDARD INSTALLATION 3/4" METERED DOMESTIC SERVICE (W/TANDEM PRV)**	W–2 3 OF 3

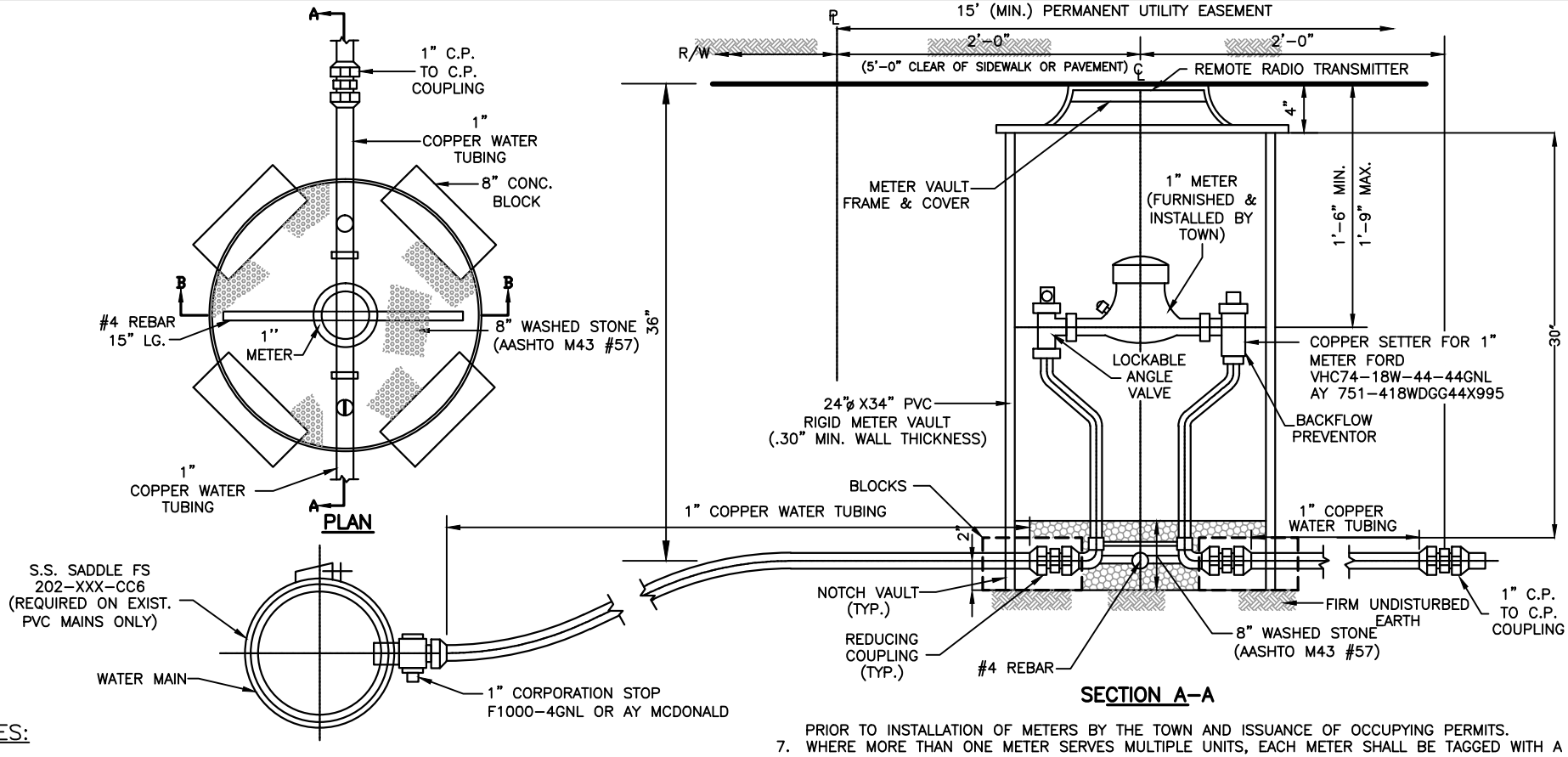

NOTES:

1. LOCATE CURB STOP & METER VAULT IN LEVEL GRASS AREA IMMEDIATELY INSIDE PROPERTY BOUNDARY LINE. DO NOT LOCATE IN DRIVEWAYS, SHOULDER AREAS, OR DITCHES. COVERS SHALL BE FLUSH WITH FINISHED GROUND.
2. WATER TUBING SHALL BE TYPE 'K' COPPER WITH GRIP JOINT RED BRASS COUPLINGS. CATALOG NUMBERS REFER TO FORD METER BOX COMPANY. EQUIVALENT AY MCDONALD COUPLINGS ARE ACCEPTABLE (REFER TO FORD CROSS REFERENCE CHART).
3. METER, VAULT AND FRAME COVER TO BE FORD FRAME FC-52 POLYMER LID 16.25P WATHhN NICOR EXT-1 (24x18) AND REMOTE TOUCH READ REGISTER.
4. IF FIRE FLOW REQUIREMENT EXCEEDS 25 GPM, A PROJECT SPECIFIC DESIGN IS REQUIRED.
5. METER VAULT SHALL BE CARSON 24-30B BODY, OR CONCRETE.
6. OWNERS SHALL BE RESPONSIBLE FOR INSTALLING TANKS ON DOMESTIC HOT WATER HEATERS IN ADDITION TO RELIEF VALVES, AND SHALL CERTIFY THE INSTALLATION IN WRITING TO THE TOWN PRIOR TO INSTALLATION OF METERS BY THE TOWN AND ISSUANCE OF OCCUPYING PERMITS.
7. WHERE MORE THAN ONE METER SERVES MULTIPLE UNITS, EACH METER SHALL BE TAGGED WITH A STAMPED BRASS TAG INDICATING THE UNIT NUMBER IT SERVES.
8. PRESSURE REDUCING VALVE (PRV) MAY BE REQUIRED (SEE STD. W-5). WHEN REQUIRED, OWNER SHALL CERTIFY IN WRITING TO THE TOWN THAT PRV HAS BEEN INSTALLED AFTER HOUSE VALVE, PRIOR TO METER INSTALLATION BY TOWN AND ISSUANCE OF OCCUPANCY PERMITS.
9. SEE WATER INSTALLATION SPECIFICATIONS FOR UTILITY EASEMENT AND CLEARANCE TO BE PROVIDED.
10. COUNTY RESIDENTS SERVED BY THE TOWN OF NORTH EAST WATER SYSTEM MUST PROVIDE A SERVICE LINE FROM THE MAIN THROUGH THE METER SETTING THAT WILL SUPPORT A DOMESTIC SPRINKLER SYSTEM.

NEW DWELLING OR EXISTING DWELLING WITH SPRINKLERS

TOWN OF NORTH EAST
INCORPORATED 1850

APPROVED: MAY 25, 2016
DATE

MAYOR AND COMMISSIONERS

STANDARD WATER DETAILS

STANDARD INSTALLATION 1" METERED DOMESTIC SERVICE

W-3

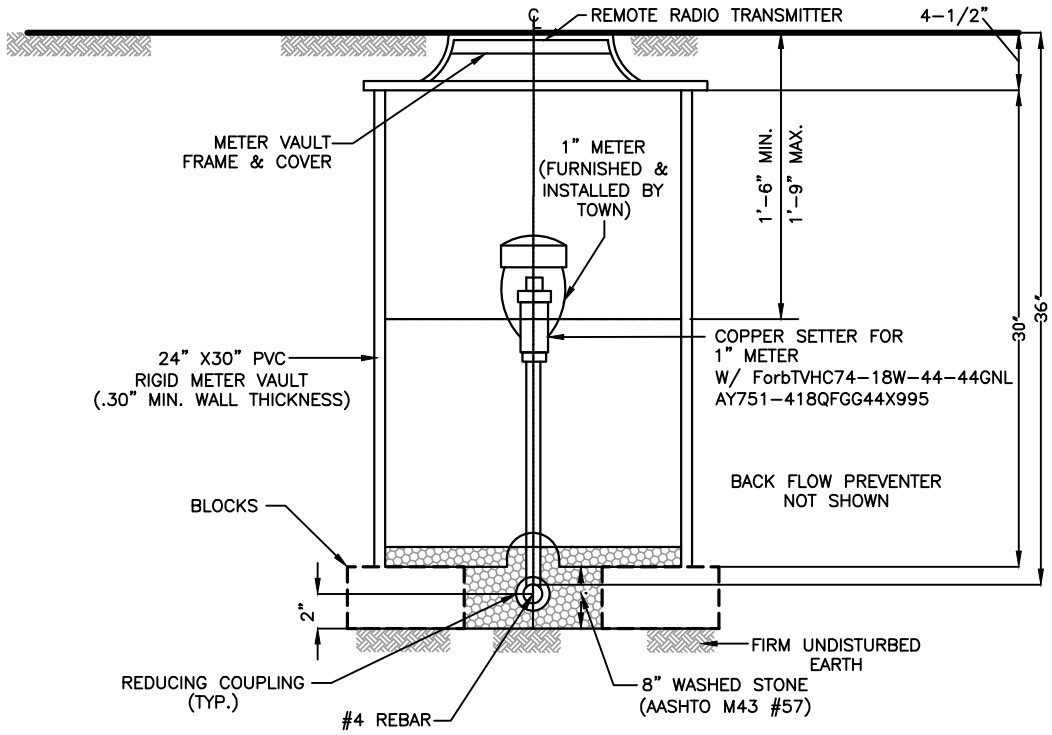

SECTION B-B

NEW DWELLING OR EXISTING DWELLING WITH SPRINKLERS

APPROVED: MAY 25, 2016
DATE

MAYOR AND COMMISSIONERS

STANDARD WATER DETAILS

STANDARD INSTALLATION 1" METERED DOMESTIC SERVICE

W-3

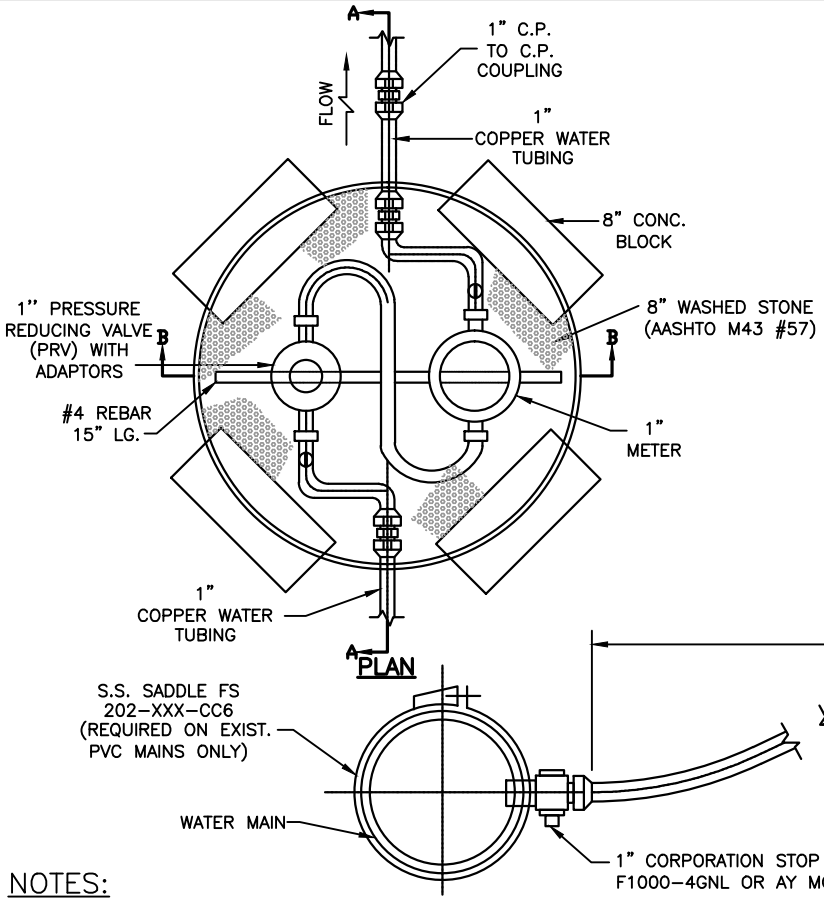

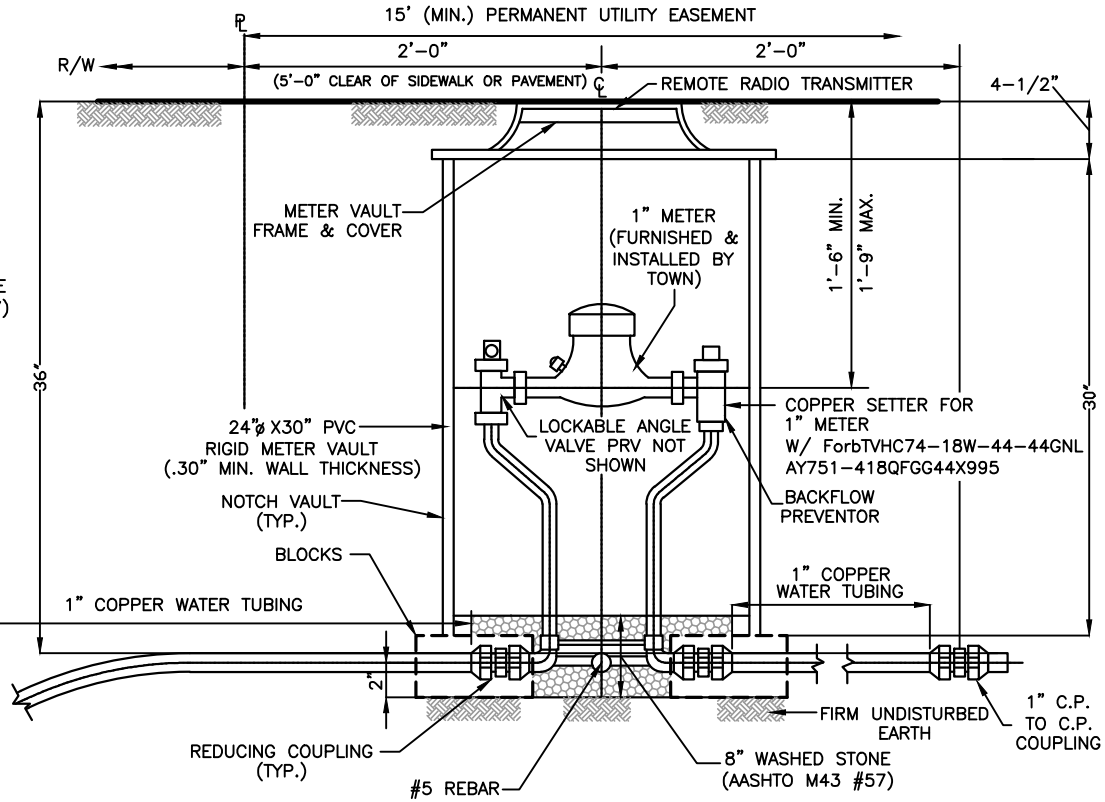

SECTION A-A

NOTES:

1. LOCATE CURB STOP & METER VAULT IN LEVEL GRASS AREA IMMEDIATELY INSIDE PROPERTY BOUNDARY LINE. DO NOT LOCATE IN DRIVEWAYS, SHOULDER AREAS, OR DITCHES. COVERS SHALL BE FLUSH WITH FINISHED GROUND.
2. WATER TUBING SHALL BE TYPE 'K' COPPER WITH GRIP JOINT RED BRASS COUPLINGS. CATALOG NUMBERS REFER TO FORD METER BOX COMPANY. EQUIVALENT AY MCDONALD COUPLINGS ARE ACCEPTABLE (REFER TO FORD CROSS REFERENCE CHART).
3. METER VAULT FRAME AND COVER TO BE FORD FRAME FC-52 POLYMER LID 16.25P NATHhN NICOR, EXT-1 (24x18) AND REMOTE RADIO TRANSMITTER.
4. INSIDE AND OUTSIDE PRV SHALL BE WILKINS MODEL500XLHTSTSC (NO SUBSTITUTIONS). OWNER SHALL CERTIFY IN WRITING TO THE TOWN THAT PRV HAS BEEN INSTALLED AFTER HOUSE VALVE INSIDE, PRIOR TO METER INSTALLATION BY TOWN AND ISSUANCE OF OCCUPANCY PERMITS.
5. IF FIRE FLOW REQUIREMENT EXCEEDS 25 GPM, A PROJECT SPECIFIC DESIGN IS REQUIRED.
6. METER VAULT SHALL BE CARSON 24-30B BODY OR CONCRETE.
7. OWNERS SHALL BE RESPONSIBLE FOR INSTALLING TANKS ON DOMESTIC HOT WATER HEATERS IN ADDITION TO RELIEF VALVES, AND SHALL CERTIFY THE INSTALLATION IN WRITING TO THE TOWN PRIOR TO INSTALLATION OF METERS BY THE TOWN AND ISSUANCE OF OCCUPYING PERMITS.
8. WHERE MORE THAN ONE METER SERVES MULTIPLE UNITS, EACH METER SHALL BE TAGGED WITH A STAMPED BRASS TAG INDICATING THE UNIT NUMBER IT SERVES.
9. SEE WATER INSTALLATION SPECIFICATIONS FOR UTILITY EASEMENT AND CLEARANCE TO BE PROVIDED.
10. COUNTY RESIDENTS SERVED BY THE TOWN OF NORTH EAST WATER SYSTEM MUST PROVIDE A SERVICE LINE FROM THE MAIN THROUGH THE METER SETTING THAT WILL SUPPORT A DOMESTIC SPRINKLER SYSTEM.

NEW DWELLING OR EXISTING DWELLING WITH SPRINKLERS

TOWN OF NORTH EAST
INCORPORATED 1850

APPROVED: MAY 25, 2016
DATE

MAYOR AND COMMISSIONERS

STANDARD WATER DETAILS

STANDARD INSTALLATION 1" SERVICE WITH 1" METER (W/ TANDEM PRV)

W-4

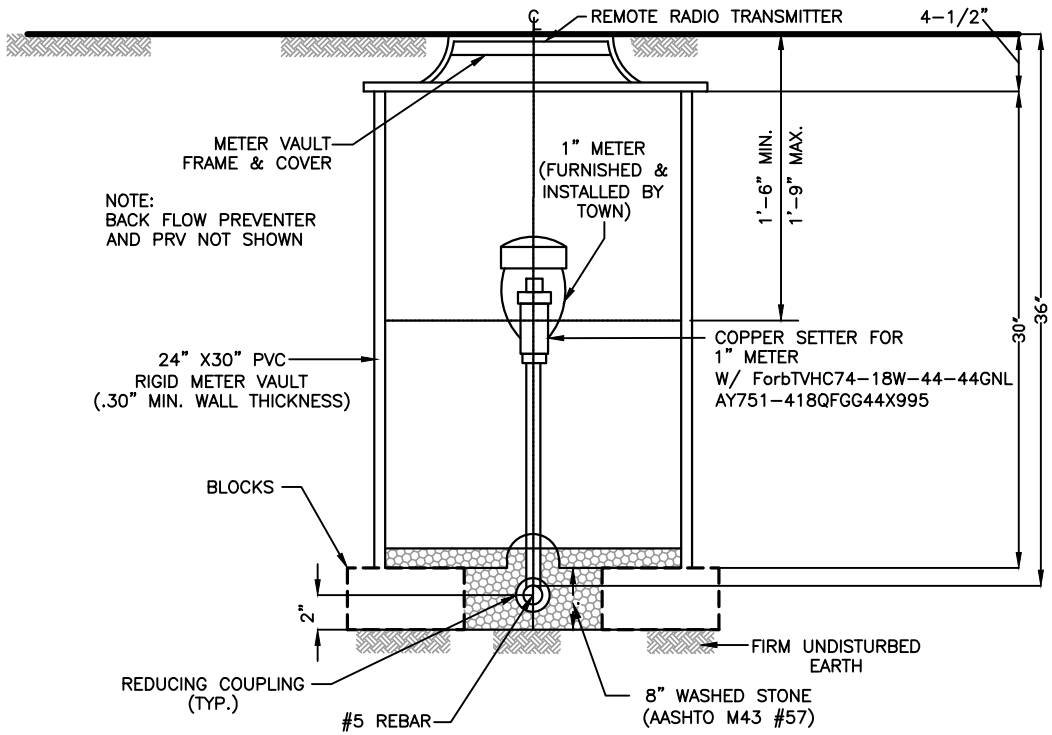

SECTION B-B

NEW DWELLING OR EXISTING DWELLING WITH SPRINKLERS

APPROVED: MAY 25, 2016
DATE

MAYOR AND COMMISSIONERS

STANDARD WATER DETAILS

STANDARD INSTALLATION 1" SERVICE WITH 1" METER (W/ TANDEM PRV)

W-4

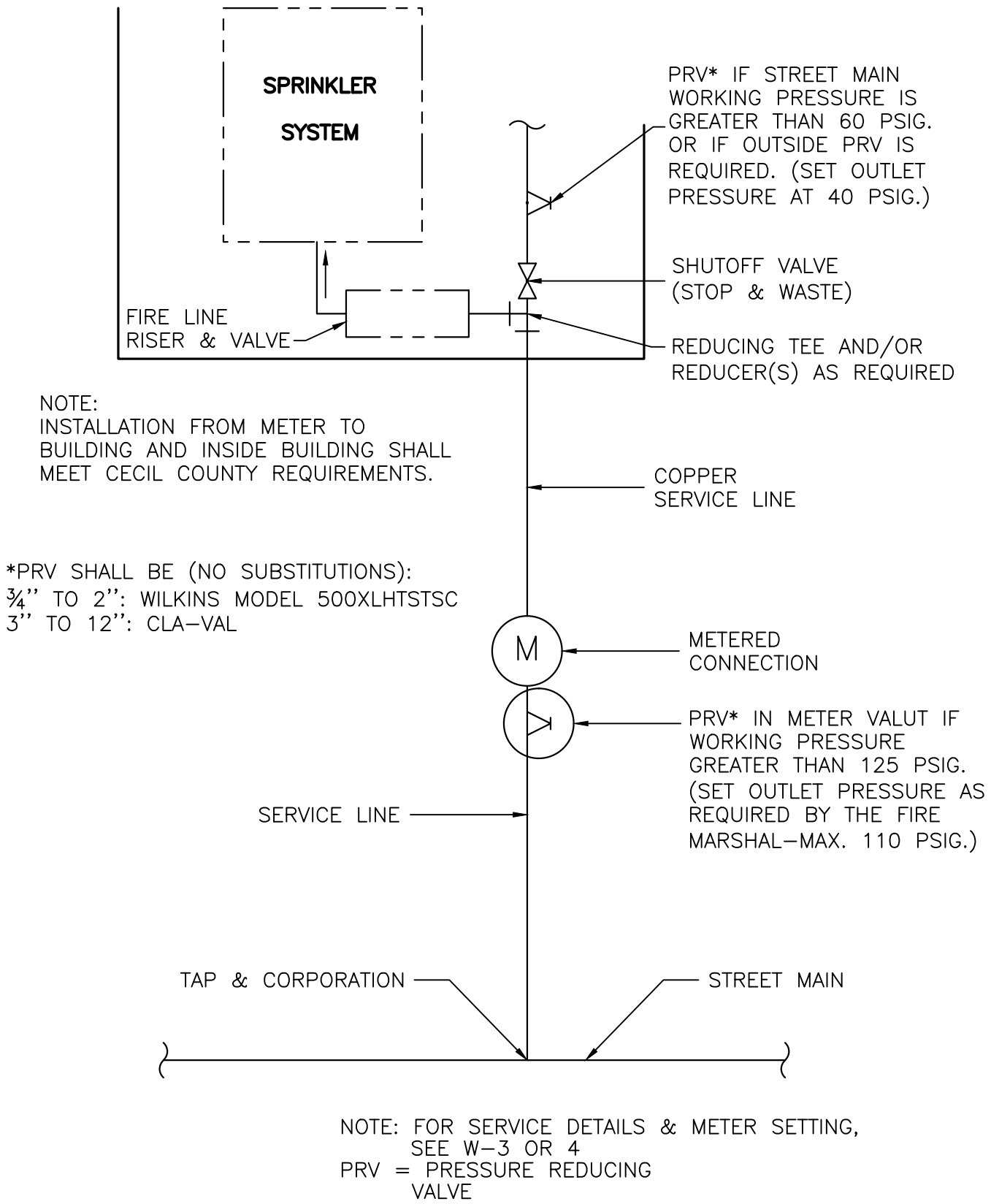

NOTE: FOR SERVICE DETAILS & METER SETTING, SEE W–3 OR 4
PRV = PRESSURE REDUCING VALVE

TOWN OF NORTH EAST INCORPORATED 1850	JULY 1, 2015 DATE MAYOR AND COMMISSIONERS	STANDARD WATER DETAILS STANDARD SPRINKLER SERVICE CONNECTION DIAGRAM	W–5

NOTE:
DO NOT STRAP HYDRANT TO VALVE UNLESS APPROVED BY TOWN ENGINEER.

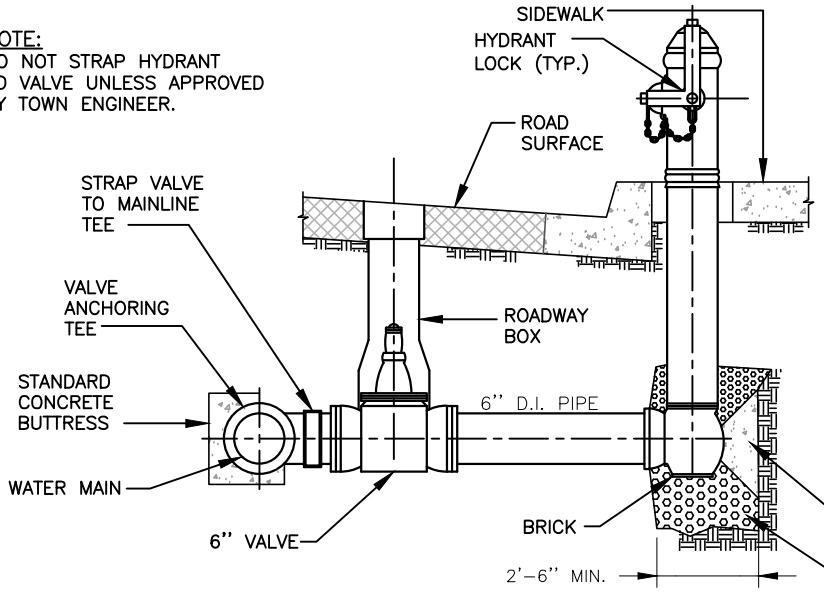

NOTE:
DEVELOPER SHALL PROVIDE MUELLER UNIVERSAL HYDRANT LOCKS FOR ALL FIRE HYDRANTS. PADLOCKS TO BE OBTAINED FROM TOWN OF NORTH EAST.

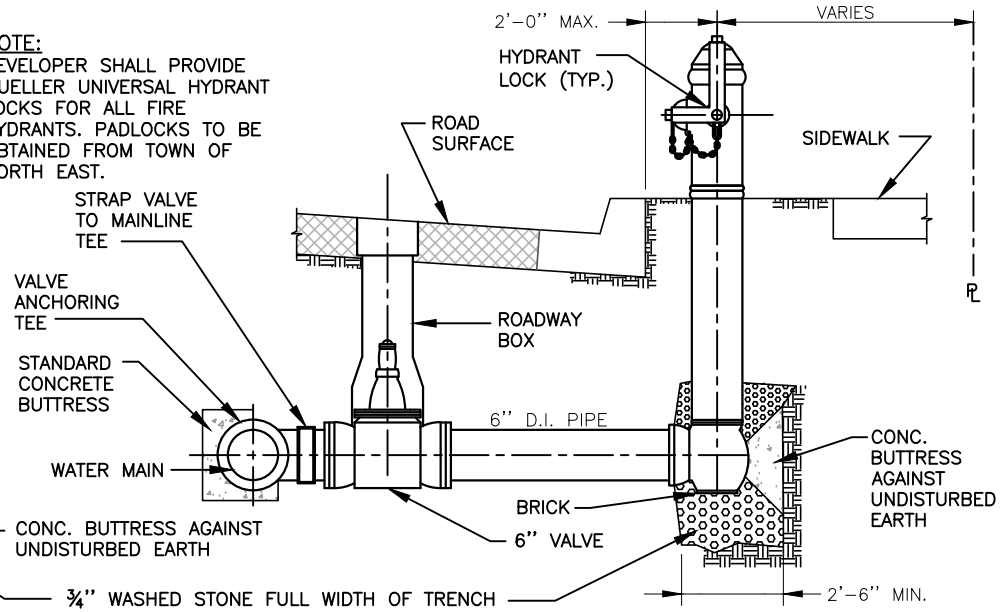

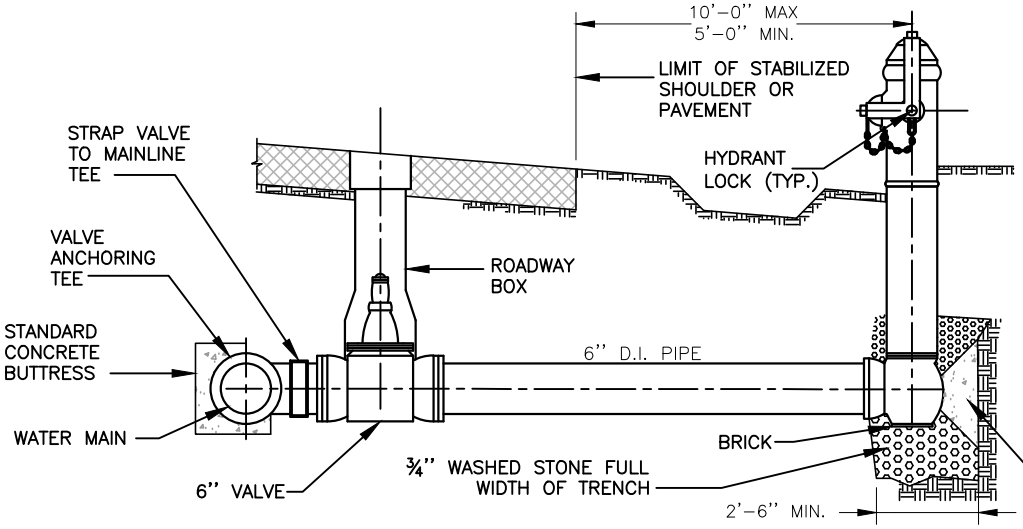

NOTES:

1. REFER TO "WATER INSTALLATION–SPECIFICATIONS" FOR VALVE & FIRE HYDRANT SPECIFICATIONS.
2. ALL FIRE HYDRANTS SHALL BE KENNEDY VALVE K–81AWC FIRE HYDRANT.
3. 4.5" STEAMER CONNECTION SHALL BE 18" ABOVE FINISHED GROUND.
4. STRAP VALVE TO MAINLINE TEE AS SHOWN ON DETAIL W–7.
5. MINIMUM COVER ON 6" F.H. LEAD SHALL BE 3'–6".
6. MINIMUM DIMENSIONS FOR FIRE HYDRANT BUTTRESS BEARING AGAINST UNDISTURBED EARTH SHALL BE 18"x18", BASED ON 3,000 PSF ALLOWABLE BEARING CAPACITY.
7. FIELD PAINT OUTSIDE OF HYDRANT ABOVE GRADE WITH 2 COATS OF APPROVED YELLOW OMAHA PAINT.
8. INSTALL "H" IN ROADWAY OPPOSITE HYDRANT USING FLUORESCENT YELLOW TRAFFIC PAINT. SIZE TO BE 36" HIGH BY 24" WIDE (TRAFFIC TAPE NOT ACCEPTABLE).
9. COVER WASHED STONE W/6 MIL PLASTIC.
10. FIRE HYDRANTS INSTALLED WITHIN PAVED PARKING OR LOADING AREAS SHALL BE PROTECTED BY MIN. TWO (2) BOLLARDS, SEE DETAIL W–22.
11. MUELLER UNIVERSAL HYDRANT LOCKS TO BE INSTALLED AS SOON AS WATER MAIN IS OPERATIONAL.

TOWN OF NORTH EAST
INCORPORATED 1850

APPROVED: MAY 25, 2016
DATE

MAYOR AND COMMISSIONERS

STANDARD WATER DETAILS

FIRE HYDRANT SETTINGS

W–6

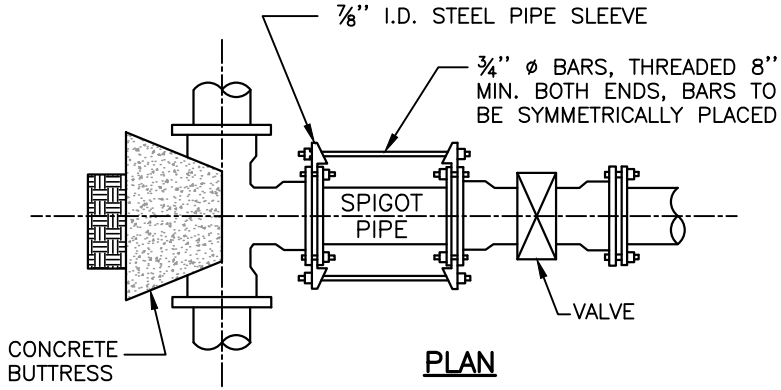

PLAN

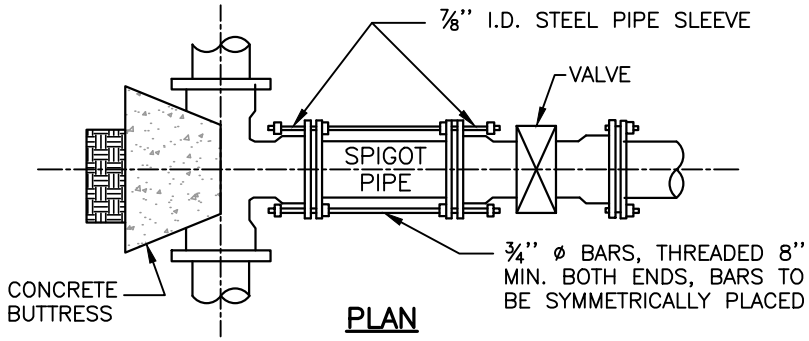

PLAN

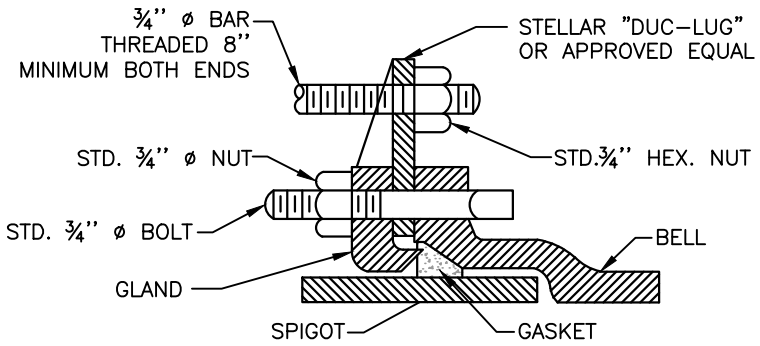

CROSS – SECTION
LUG ASSEMBLY
(ALTERNATIVE 1)

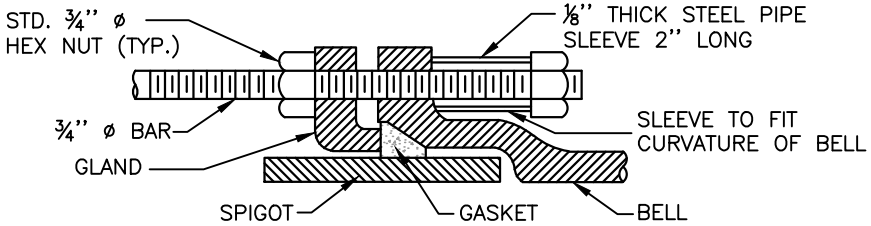

CROSS – SECTION
SLEEVE AND BAR ASSEMBLY
(ALTERNATIVE 2)

VALVE SIZE	NUMBER OF 3/4 ø BARS REQUIRED	MAX. LENGTH OF SPIGOT PIPE
6"	2	27"
8"	2	27"
10"	4	27"
12"	4	27"
14"	6	36"
16"	8	36"

NOTES:

1. APPLY COAL TAR PROTECTIVE COATING TO ALL EXPOSED STEEL PER AWWA C-203 OR USE STAINLESS STEEL LUGS AND BARS
2. MEGALUG RETAINER GLANDS MAY BE USED IN LIEU OF THE ALTERNATIVES SHOWN.

THIS STANDARD DETAIL WAS REVIEWED AND UPDATED BY DATE ONLY

TOWN OF NORTH EAST
INCORPORATED 1850

APPROVED: JULY 1, 2015
DATE

MAYOR AND COMMISSIONERS

STANDARD WATER DETAILS

METHOD OF STRAPPING VALVE TO MAIN

W-7

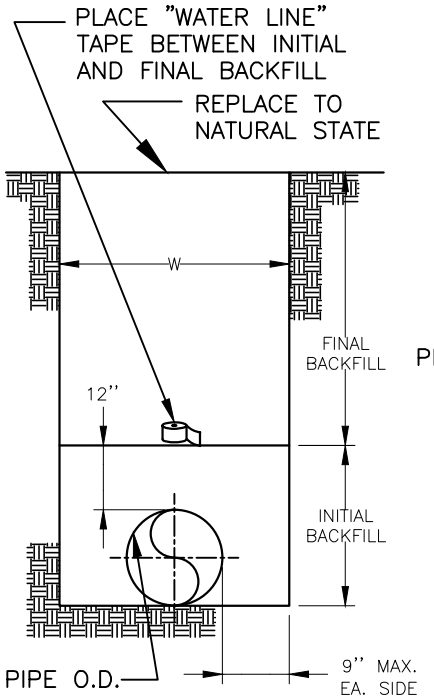

OUTSIDE PAVED AREAS (NOT IN STATE ROAD)

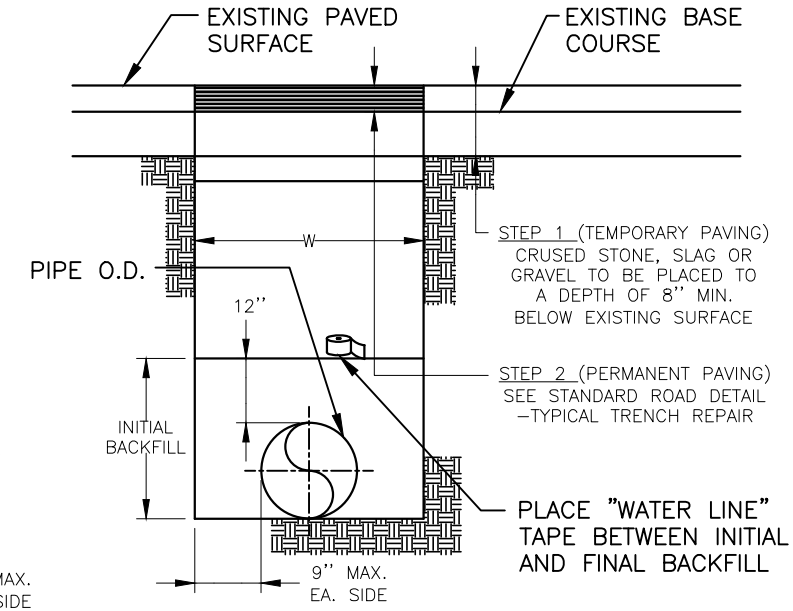

IN PAVED AREAS (NOT IN STATE ROAD)

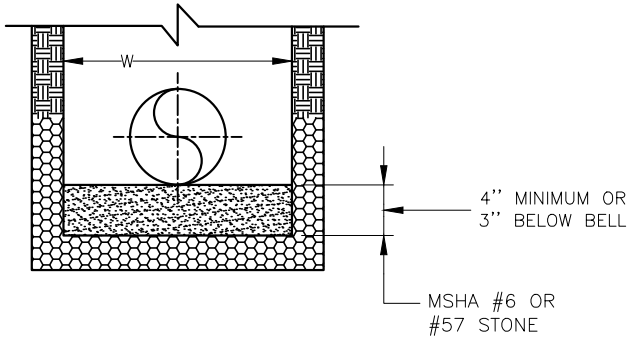

TRENCH IN ROCK (NOT IN STATE ROAD)

NOTES:

1. FOR EXCAVATION AND REPAVING IN S.H.A. RIGHT–OF–WAY REFER TO S.H.A. PERMIT.
2. TRENCHES SHALL BE SHEETED OR BRACED AS REQUIRED BY MOSHA.
3. PROVIDE BEARING FOR FULL LENGTH OF BARREL, DIG HOLES FOR BELLS.
4. W = MAXIMUM TRENCH WIDTH.
5. PLACE INITIAL BACKFILL USING A MECHANICAL TAMPER. AVOID CONTACT WITH PIPE.
6. THIS STANDARD IS SUPPLEMENTED BY THE "WATER INSTALLATION SPECIFICATIONS."

PIPE I.D.	W (IN.)
6"	24
8"	30
10"	36
12"	36

TOWN OF NORTH EAST
INCORPORATED 1850

APPROVED: JULY 1, 2015
DATE

MAYOR AND COMMISSIONERS

STANDARD WATER DETAILS

PIPE TRENCH DETAIL

W–8

NOTES:
1. ALL CONCRETE TO BE 2500 P.S.I.
2. BUTTRESS DIMENSIONS SHOWN ARE MINIMUM. DIMENSIONS ARE BASED UPON SOIL BEARING PRESSURE OF 3000 P.S.F. AND STATIC WATER PRESSURE OF 150 P.S.I.. WHERE PRESSURE EXCEEDS 150 P.S.I. OR WHERE SOIL BEARING PRESSURE IS LESS THAN 3000 P.S.F., SPECIAL BUTTRESS DESIGN IS REQUIRED.

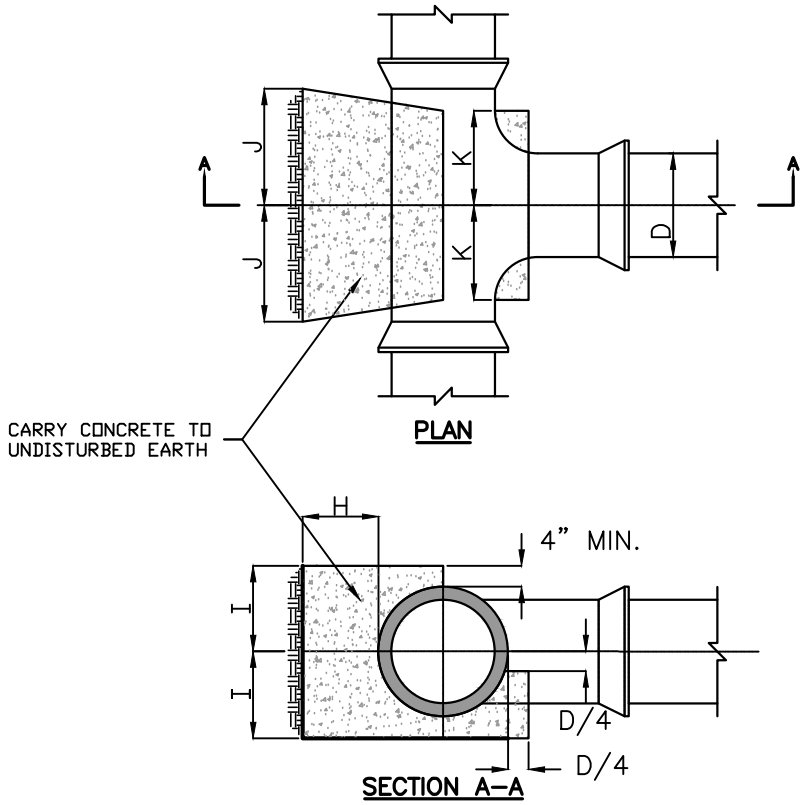

BUTTRESS FOR TEES									
SIZE OF BRANCH									
D	6"	8"	10"	12"	16"	20"	24"	30"	36"
H	8"	9"	10"	1'–0"	1'–2"	1'–4"	1'–6"	1'–9"	2'–0"
I	8"	10"	1'–0"	1'–3"	1'–8"	2'–1"	2'–6"	3'–1"	3'–9"
J	6"	8"	1'–0"	1'–0"	1'–4"	1'–8"	2'–0"	2'–6"	3'–0"
K	6"	8"	8"	8"	10"	1'–2"	1'–4"	1'–6"	1'–10"

BUTTRESS FOR TEES

THIS STANDARD DETAIL WAS REVIEWED AND UPDATED BY DATE ONLY

TOWN OF NORTH EAST INCORPORATED 1850	JULY 1, 2015 DATE MAYOR AND COMMISSIONERS	STANDARD WATER DETAILS BUTTRESS FOR TEES	W–9

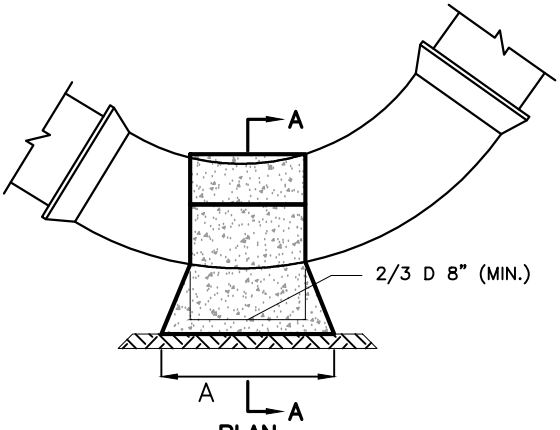

PLAN

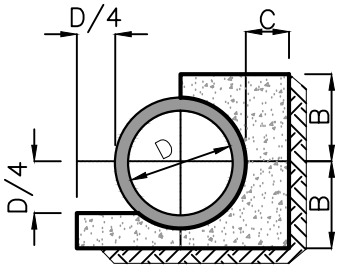

SECTION A–A

BUTTRESS FOR HORIZONTAL BENDS										
BEND		6"	8"	10"	12"	16"	20"	24"	30"	36"
1/64										
	A						1'–8"	2'–0"	2'–6"	3'–0"
	B						10"	1'–0"	1'–3"	1'–6"
	C						10"	1'–0"	1'–1"	1'–2"
1/32										
	A	6"	8"	10"	1'–0"	1'–4"	1'–8"	2'–0"	2'–6"	3'–0"
	B	7"	8"	9"	10"	1'–0"	1'–2"	1'–4"	1'–7"	1'–11"
	C	7"	7"	8"	8"	9"	10"	1'–0"	1'–1"	1'–2"
1/16										
	A	9"	10"	16"	19"	2'–3"	3'–0"	3'–6"	4'–2"	5'–4"
	B	7"	8"	9"	10"	1'–0"	1'–2"	1'–4"	1'–7"	2'–0"
	C	8"	9"	10"	11"	1'–2"	1'–4"	1'–6"	1'–9"	2'–0"
1/8										
	A	1'–3"	1'–8"	2'–1"	2'–6"	3'–4"	4'–2"	5'–0"	6'–3"	7'–6"
	B	7"	8"	9"	11"	1'–3"	1'–6"	1'–8"	2'–0"	2'–6"
	C	8"	9"	10"	11"	1'–2"	1'–4"	1'–9"	2'–3"	2'–8"

BUTTRESS FOR HORIZONTAL BENDS

NOTES:
1. ALL CONCRETE TO BE 2500 P.S.I.
2. BUTTRESS DIMENSIONS SHOWN ARE MINIMUM. DIMENSIONS ARE BASED UPON SOIL BEARING PRESSURE OF 3000 P.S.F. AND STATIC WATER PRESSURE OF 150 P.S.I.. WHERE PRESSURE EXCEEDS 150 P.S.I. OR WHERE SOIL BEARING PRESSURE IS LESS THAN 3000 P.S.F., SPECIAL BUTTRESS DESIGN IS REQUIRED.

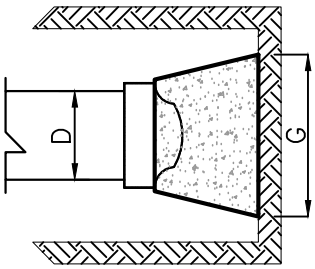

PLAN

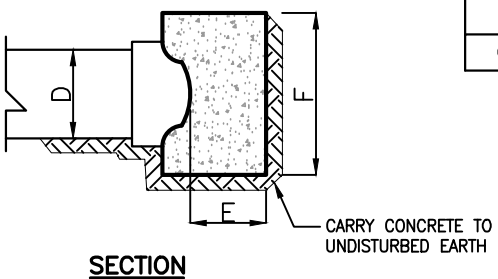

SECTION

BUTTRESS FOR CAPS									
D	6"	8"	10"	12"	16"	20"	24"	30"	36"
E	6"	8"	8"	10"	1'–0"	1'–4"	1'–8"	2'–0"	2'–0"
F	11"	1'–2"	1'–6"	1'–9"	2'–4"	2'–11"	3'–6"	4'–4"	5'–3"
G	13"	1'–8"	2'–1"	2'–6"	3'–4"	4'–2"	5'–0"	6'–3"	7'–6"

BUTTRESS FOR CAPS

THIS STANDARD DETAIL WAS REVIEWED AND UPDATED BY DATE ONLY

TOWN OF NORTH EAST
INCORPORATED 1850

JULY 1, 2015
DATE

MAYOR AND COMMISSIONERS

STANDARD WATER DETAILS

BUTTRESS FOR CAPS AND HORIZONTAL BENDS

W–10

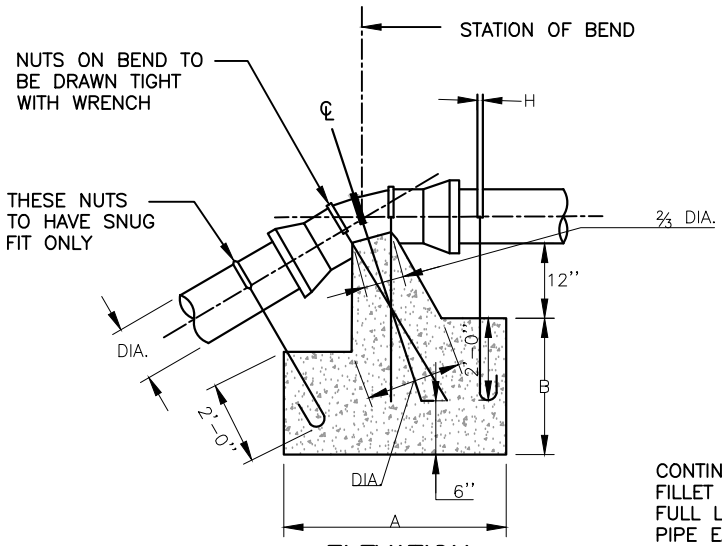

ELEVATION

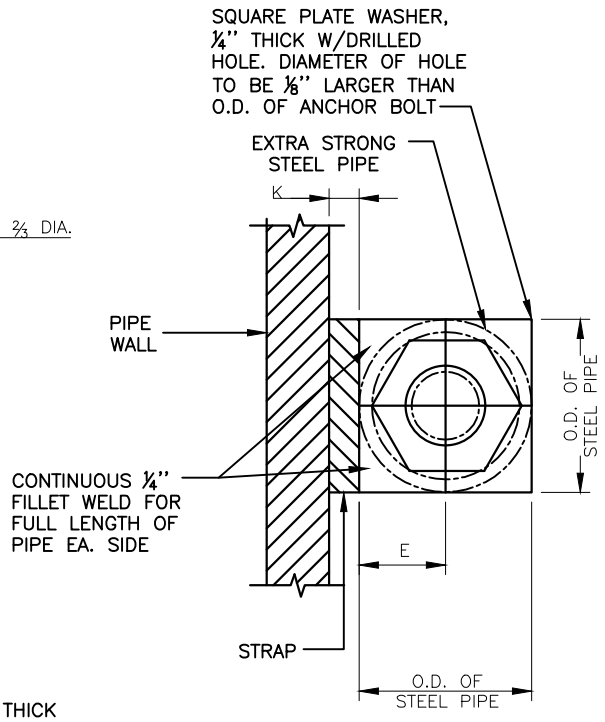

STRAP CONNECTION

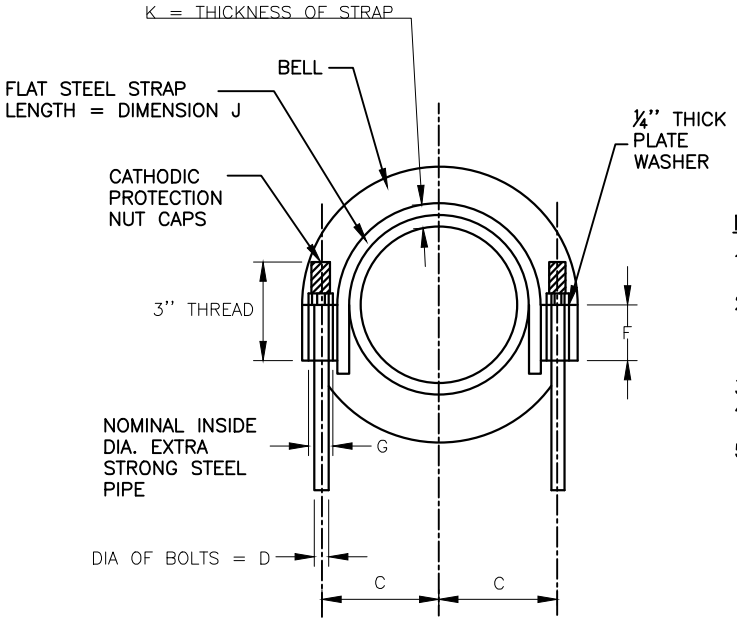

CROSS SECTION

NOTES:

1. FOR 1/32 BENDS, USE ONE STRAP ON BEND WITH ANCHOR BOLTS ON ℄ OF BEND
2. ALL STRAPS SHALL BE SHOP-WORKED TO SHAPE BEARING AREA TO CONFORM TO CURVATURE OF BEND. MANUFACTURED STRAPS MAY BE USED AS APPROVED.
3. ALL CONCRETE TO BE MIX NO. 2.
4. CARRY ALL BEARING SURFACES TO UNDISTURBED EARTH.
5. PAINT ALL EXPOSED STEEL WITH AN APPROVED BITUMINOUS COATING.

ANCHORAGES FOR VERTICAL BENDS

	⅛ (45°)					1/16 (22 1/2°)					1/32 (11 1/4°)				
	16"	20"	24"	30"	36"	16"	20"	24"	30"	36"	16"	20"	24"	30"	36"
A	6'-6"	8'-0"	9'-6"	11'-0"	11'-6"	5'-6"	7'-6"	8'-6"	8'-6"	10'-0"	4'-0"	5'-0"	5'-9"	6'-6"	7'-0"
B	4'-0"	4'-6"	5'-6"	6'-0"	6'-6"	2'-6"	2'-8"	3'-8"	4'-6"	5'-6"	2'-0"	2'-6"	2'-6"	2'-8"	4'-0"
W	5'-2"	5'-6"	6'-0"	6'-6"	7'-6"	4'-4"	4'-8"	5'-0"	5'-4"	6'-0"	3'-6"	4'-0"	4'-3"	4'-6"	5'-0"
C	9¾"	11⅞"	14 1/16"	17¼"	20 7/16"	9¾"	11⅞"	13⅞"	17⅞"	20 3/16"	9¾"	11⅞"	14"	17 1/16"	20 7/16"
D	¾"	¾"	1"	1⅛"	1⅜"	¾"	¾"	¾"	⅞"	1"	¾"	¾"	⅞"	1"	1¼"
E	¾"	¾"	13/16"	1"	1 3/16"	¾"	¾"	¾"	⅞"	15/16"	¾"	¾"	⅞"	15/16"	1 3/16"
F	2¼"	2¼"	5"	6"	6½"	2¼"	2¼"	2¼"	3½"	5"	2¼"	2¼"	3½"	5"	6"
G	1"	1"	1½"	1½"	2"	1"	1"	1"	1¼"	1½"	1"	1"	1¼"	1½"	2"
H	2"	2"	2½"	2½"	2½"	2"	2"	2"	2"	2½"	2"	2"	2"	2½"	2½"
J	34"	43"	53"	68"	80"	34"	43"	53"	68"	80"	34"	43"	53"	68"	80"
K	¼"	⅜"	⅜"	½"	½"	¼"	⅜"	⅜"	⅜"	⅜"	¼"	⅜"	⅜"	⅜"	½"
NO. OF BOLTS	10	10	10	10	10	10	10	10	10	10	6	6	6	6	6

THIS STANDARD DETAIL WAS REVIEWED AND UPDATED BY DATE ONLY

TOWN OF NORTH EAST INCORPORATED 1850

JULY 1, 2015
DATE

MAYOR AND COMMISSIONERS

STANDARD WATER DETAILS

ANCHORAGES FOR VERTICAL BENDS

W-11

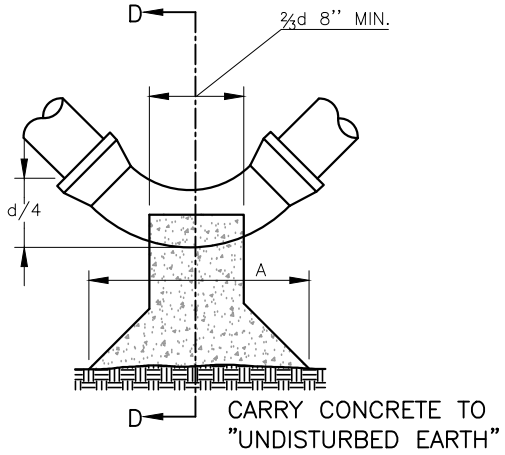

ELEVATION

		BUTTRESS FOR VERTICAL BENDS								
		6"	8"	10"	12"	16"	20"	24"	30"	36"
1/64 (5 5/8°)	A						1'-8"	2'-0"	2'-6"	3'-0"
	B						10"	1'-0"	1'-3"	1'-6"
	C						10"	1'-0"	1'-1"	1'-2"
1/32 (11 1/4°)	A	6"	8"	10"	10"	1'-4"	1'-8"	2'-0"	2'-6"	3'-0"
	B	7"	8"	9"	10"	1'-0"	1'-2"	1'-4"	1'-7"	1'-10"
	C	7"	7"	8"	8"	9"	10"	1'-0"	1'-1"	1'-2"
1/16 (22 1/2°)	A	9"	1'-0"	1'-6"	1'-9"	2'-3"	3'-0"	3'-6"	4'-2"	5'-4"
	B	7"	7"	8"	10"	1'-0"	1'-2"	1'-4"	1'-7"	2'-0"
	C	7"	7"	8"	8"	9"	10"	1'-0"	1'-1'	1'-2"
1/8 (45°)	A	1'-3"	1'-8"	2'-1"	2'-6"	3'-4"	4'-2"	5'-0"	6'-3"	7'-6"
	B	7"	8"	9"	11"	1'-3"	1'-6"	1'-9"	2'-3"	2'-6"
	C	7"	8"	10"	11"	1'-3"	1'-6"	1'-9"	2'-3"	2'-9"

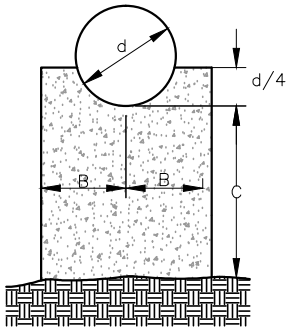

SECTION D-D

BUTTRESS FOR VERTICAL BENDS

REINFORCING BARS				
BEND\SIZE	6"	8"	10"	12"
1/64	3-#4			
1/32	3-#4	3-#4	3-#4	3-#4
1/16	3-#4	3-#4	3-#4	3-#4
1/8	3-#4	3-#4	3-#5	3-#5

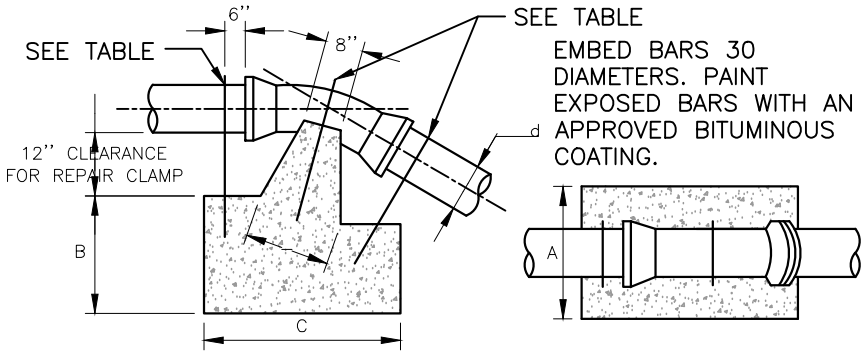

ELEVATION

PLAN

ANCHORAGE FOR VERTICAL BENDS

BEND\SIZE		ANCHORAGE FOR VERTICAL BENDS			
		6"	8"	10"	12"
1/32 (11¼°)	A	1'-6"	1-6"	1'-5"	3'-0"
	B	1'-3"	1'-9"	1'-3"	2'-0"
	C	2'-0"	2'-6"	2'-9"	3'-0"
1/16 (22½°)	A	2'-0"	3'-4"	3'-8"	4'-0"
	B	1'-9"	2'-3"	2'-6"	2'-6"
	C	2'-6"	2'-8"	3'-10"	4'-0"
1/8 (45°)	A	2'-6"	3'-0"	4'-0"	4'-6"
	B	2'-6"	2'-9"	3'-0"	3'-6"
	C	3'-0"	4'-0"	4'-6"	4'-9"

NOTES:

1. ALL CONCRETE TO BE MIX NO. 2.
2. BUTTRESS DIMENSIONS ARE BASED UPON A SOIL BEARING PRESSURE OF 3000 PSF AND STATIC PRESSURE OF 150 PSI. WHERE PRESSURE EXCEEDS 150 PSI OR WHERE SOIL BEARING PRESSURE IS LESS THAN 3000 PSF, A SPECIAL BUTTRESS DESIGN IS REQUIRED.
3. ANCHORAGE DIMENSIONS ARE FOR BENDS GREATER THAN 12" REFER TO PLATE
4. BUTTRESS DIMENSIONS ARE FOR BENDS 6" TO 36" INCLUSIVE.
5. MINOR VARIATIONS IN BUTTRESS SHAPE WILL BE PERMITTED, PROVIDED THE MINIMUM BEARING AGAINST UNDISTURBED EARTH IS MAINTAINED.
6. ANCHORING BARS TO CONFORM TO PIPE O.D. PROVIDE A CONTINUOUS BEARING SURFACE FOR ONE HALF THE PIPE PERIMETER.
7. WHEN ANCHORING PVC PIPE, THE STRAPPING IN CONTACT WITH THE PIPE SURFACE SHALL BE 1" WIDE x ¼" THICK STEEL (NOT SHOWN). THE REMAINING PORTION OF THE STRAP SHALL BE A REINFORCING BAR SIZED IN ACCORDANCE WITH THE PERTINENT CHART.

THIS STANDARD DETAIL WAS REVIEWED AND UPDATED BY DATE ONLY

TOWN OF NORTH EAST
INCORPORATED 1850

JULY 1, 2015
DATE

MAYOR AND COMMISSIONERS

STANDARD WATER DETAILS

BUTTRESSES & ANCHORAGES FOR VERTICAL BENDS

W-12

SIZE	O	P	R	S
6"	12"	14"	20"	5"
8"	16"	18"	19"	6"
10"	18"	25"	19"	6"
12"	20"	30"	18"	7"
14"	28"	30"	20"	9"
15"	29"	36"	20"	10"
18"	31"	42"	23"	12"
20"	34"	46"	30"	12"
24"	46"	48"	33"	12"
30"	60"	60"	36"	14"
36"	72"	72"	40"	14"

COST OF BUTTRESS TO BE INCLUDED IN PRICES BID

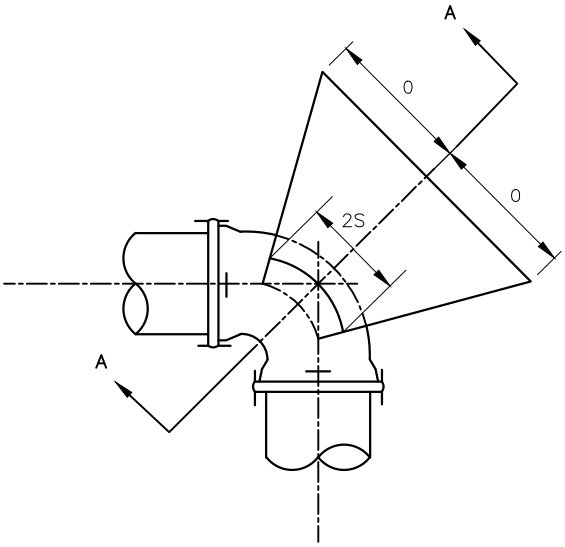

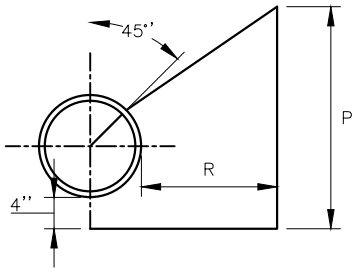

SECTION A–A

MINOR VARIATIONS IN BUTTRESS SHAPE WILL BE PERMITTED PROVIDED THE MINIMUM BEARING AGAINST SOLID GROUND IS MAINTAINED.

CARRY ALL BEARING SURFACES TO SOLID GROUND.
THIS DETAIL TO BE USED FOR HORIZONTAL ¼ BENDS ONLY.
THIS DETAIL TO BE USED WITH CLASS 150 PIPE ONLY.
ALL CONCRETE TO BE 2500 P.S.I.

THIS STANDARD DETAIL WAS REVIEWED AND UPDATED BY DATE ONLY

TOWN OF NORTH EAST
INCORPORATED 1850

JULY 1, 2015
DATE

MAYOR AND COMMISSIONERS

STANDARD WATER DETAILS

BUTTRESS FOR ¼ BENDS

W–13

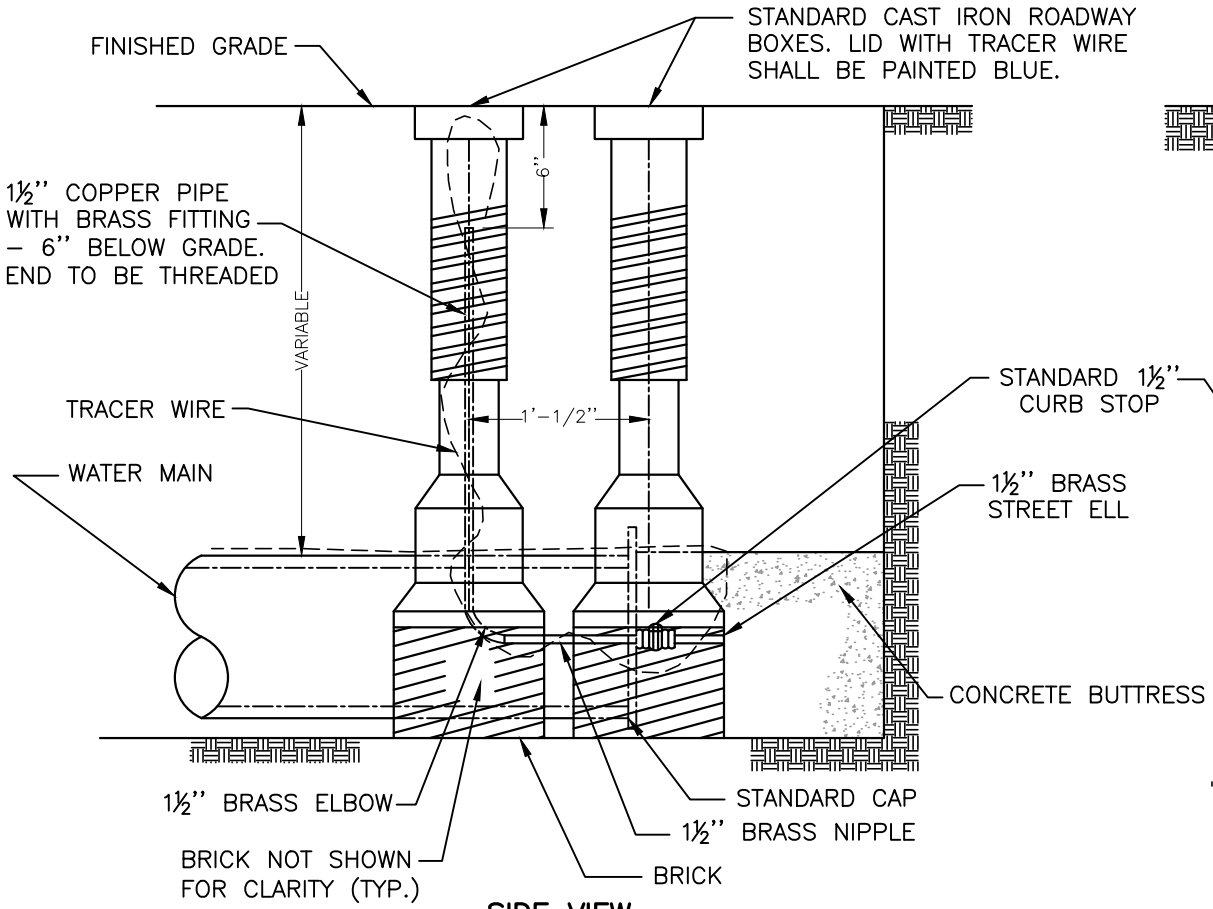

SIDE VIEW

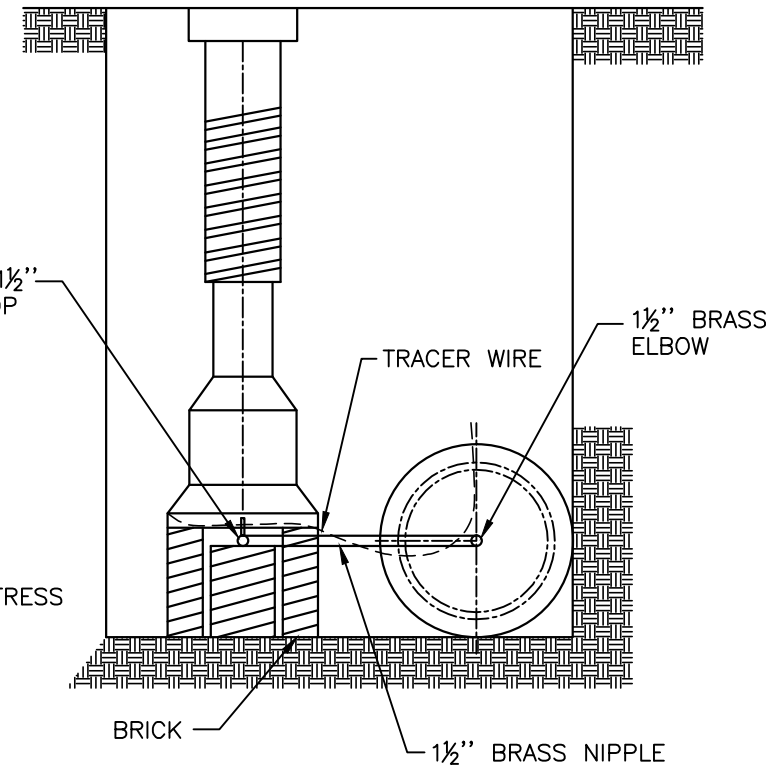

FRONT VIEW
(FOR CLARITY, BUTTRESS NOT SHOWN)

NOTES:

1. PROVIDE ONE FULL LENGTH OF PIPE (APPROX. 20 FT.) MINIMUM BETWEEN WATER MAIN VALVE AND CAP AND BLOW.
2. PROVIDE TRACER WIRE ON ALL NON-METALLIC PIPE. TRACER WIRE SHALL BE LONG ENOUGH TO EXTEND 12'' ABOVE TOP OF ROADWAY BOX. STRIP THE INSULATION FROM THE LAST ⅜'' OF WIRE AND PLACE WITHIN ROADWAY BOX.
3. PROVIDE VALVE KEY EXTENSION WHEN DEPTH OF SLOTTED KEY EXCEEDS 6'-0''.
4. EX. CAP & BLOW MAY NOT BE USED FOR WATER SERVICE. INSTEAD EXISTING MAIN SHALL RECEIVE STANDARD TAPPED SERVICE AND EXISTING CAP SHALL BE REPLACED WITH NEW CAP AND BUTTRESS.

**FIRE HYDRANTS ARE TO BE INSTALLED AT THE END OF WATER MAINS. CAP AND BLOW OFF ONLY TO BE USED WITH APPROVAL OF THE ENGINEER.

TOWN OF NORTH EAST
INCORPORATED 1850

APPROVED: JULY 1, 2015
DATE

MAYOR AND COMMISSIONERS

STANDARD WATER DETAILS

CAP AND BLOW-OFF

W-14

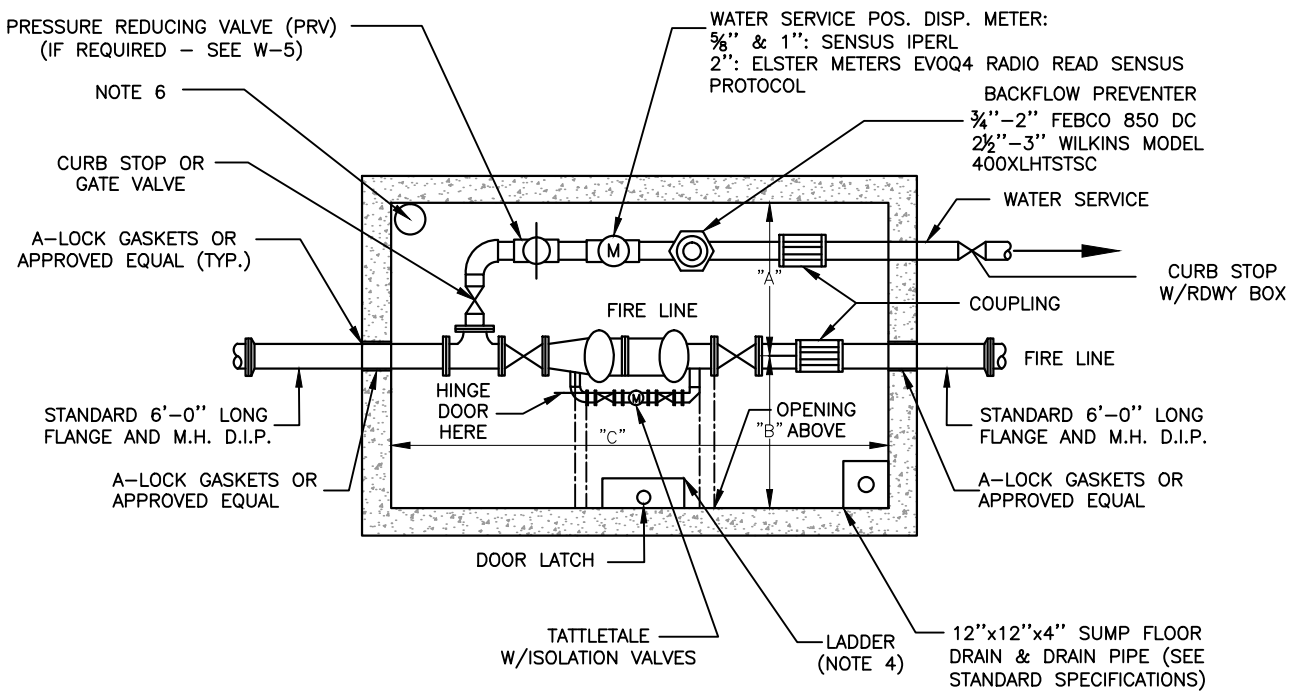

PLAN

SIZE*	A	B	C
4"	48	44	112
6"	48	44	124
8"	48	44	136
10"	51	48	148

DIMENSIONS IN INCHES
* FIRE LINE SIZE

METER SIZE	SERVICE LINE
⅝"	¾"
1"	1"
1–1/2"	2"
2"	2–1/2"
2"	3"

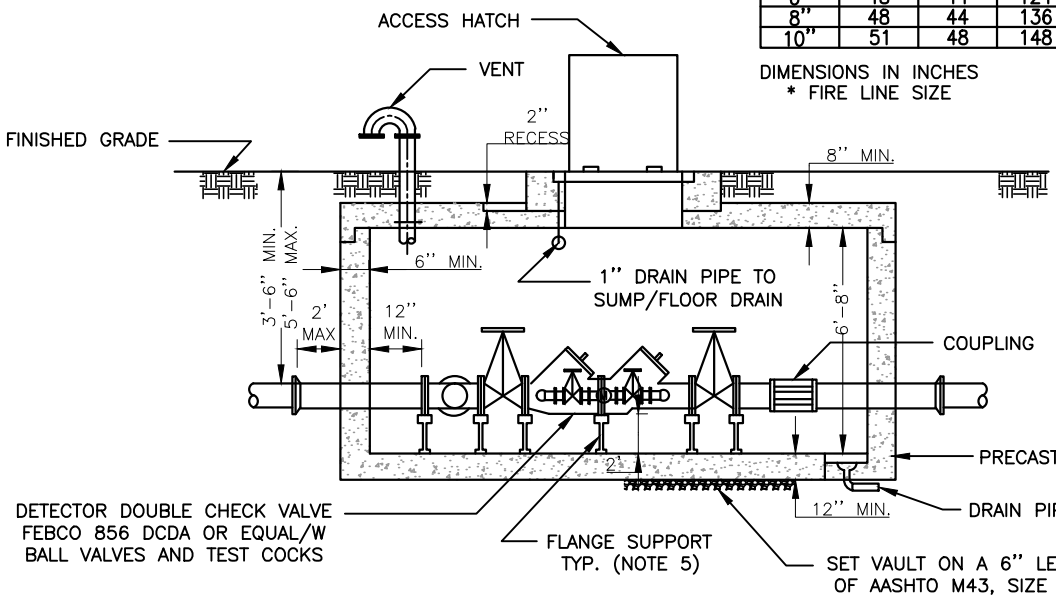

SECTION

NOTES:

1. GATE VALVE REQUIRED AT MAINLINE TAP
2. ALL BOLTS & NUTS TO BE S.S.
3. INSTALLATION FROM METER VAULT TO BUILDING AND INSIDE BUILDING SHALL MEET CECIL COUNTY REQUIREMENTS.
4. LADDER SHALL BE MOSHA ALUMINUM LADDER WITH SAFETY EXTENSION BAR AGAINST OUTSIDE BAR OF LADDER
5. FLANGE SUPPORTS SHALL BE STANDON MODEL S89.
6. 6" FLANGED VENT PIPE – EXTEND TO 1–FT. ABOVE FINISHED GRADE. SEE DETAIL THIS SHEET.

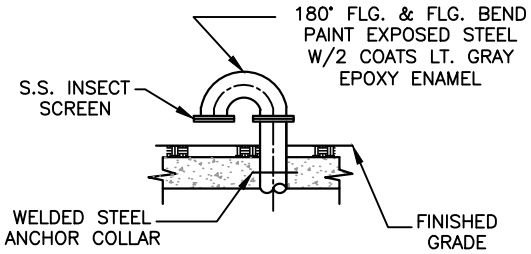

TYPICAL VENT PIPE

FOR ADDITIONAL NOTES:
SEE SHEET 2 OF 2

TOWN OF NORTH EAST
INCORPORATED 1850

MAY 25, 2016
DATE

MAYOR AND COMMISSIONERS

STANDARD WATER DETAILS

METERED WATER SERVICE (¾" THRU 3" & FIRE SUPPLY)

W–15

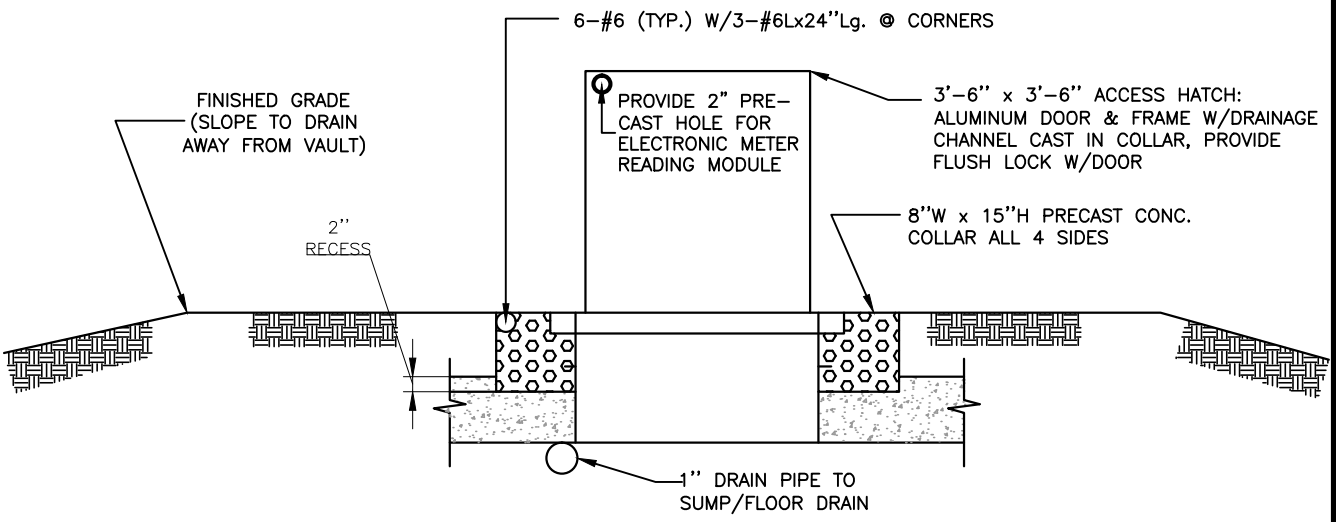

ACCESS HATCH DETAIL

ACCESS HATCH NOTES:

1. OFF–STREET GRASS AREA LOCATIONS (PREFERRED)–BILCO MODEL JH–20
2. ROADWAYS–BILCO MODEL HLC.
3. IN OFF–STREET PAVED AREAS TOP OF VAULT TO BE 1'–0'' ABOVE PAVING W/6'' SCH.40 STEEL PIPE BOLLARDS 7'–0'' LG. (3'–0'' BURIED) FILLED WITH CONCRETE & PAINTED YELLOW. FOUR REQUIRED, ONE AT EACH CORNER. SEE VP–22.
4. LOADS: LL = AASHTO H–20; DL = EARTH@100 PCF AND 42 PCF EQUIV. FLUID PRESSURE

NOTES:

1. WATER METER SHALL BE ⅝'' OR 1'', SENSUS IPEARL METERS, OVER 1'' ELSTER. METERS LARGER THAN 2'' SHALL BE COMPOUND METERS IN SEPARATE VAULTS (SEE W–18 & W–19). CONTRACTOR TO FURNISH AND INSTALL METER (SEE STANDARD SPECIFICATIONS)
2. LOCATE METER VAULT IN LEVEL GRASS AREA BEHIND CURB OR SIDEWALK WITHIN THE EASEMENT AREA, AT A LOCATION DESIGNATED BY THE TOWN ENGINEER. DO NO LOCATE IN DRIVEWAYS, SHOULDER AREAS, OR DITCHES. HATCH DOOR SHALL BE FLUSH WITH FINISHED GROUND, EXCEPT SEE 3. UNDER "ACCESS HATCH NOTES:."
3. OWNER SHALL BE RESPONSIBLE FOR INSTALLING EXPANSION TANKS ON DOMESTIC HOT WATER HEATERS IN ADDITION TO RELIEF VALVES, AND SHALL CERTIFY INSTALLATION IN WRITING TO THE TOWN PRIOR TO WATER TURN–ON AND ISSUANCE OF OCCUPANCY PERMIT.
4. WATER SERVICE PIPE MATERIAL SHALL BE AS FOLLOWS:
   ¾'' THRU 2½'' – TYPE K COPPER W/GRIP JOINT RED BRASS COUPLINGS.
   3'' & LARGER – D.I.P. MIN. CLASS 51
5. PRECAST VAULTS SHALL BE AS MANUFACTURED BY A.C. MILLER CONCRETE PRODUCTS CO., ROTONDO–PENN CAST, OR APPROVED EQUAL. SUBMIT VAULT DESIGN TO TOWN ENGINEER FOR REVIEW AND APPROVAL.
6. VALVES SHALL BE TOWN STANDARD.
7. WHEN REQUIRED BY STANDARD DETAIL W–5, OUTSIDE PRESSURE REDUCING VALVE (PRV) SHALL BE INSTALLED IN A SEPARATE VAULT BETWEEN THE MAINLINE AND METER VAULT. PRV SHALL BE CLA–VAL (FOR LARGE PRV), AND LOW FLOW PRV BYPASS (IF REQUIRED). SUBMIT DESIGN FOR TOWN ENGINEER'S REVIEW AND APPROVAL.
8. NIPPLES FOR SMALL PIPING SHALL BE THREADED BRASS.
9. CONTRACTOR SHALL BLOCK GATE VALVES EACH SIDE OF METER VAULT & TEST SERVICE MAIN THRU BYPASS.
10. SEE STANDARD SPECIFICATIONS FOR UTILITY EASEMENT TO BE PROVIDED.
11. ALL VAULTS PENETRATIONS SHALL BE WATERTIGHT.

TOWN OF NORTH EAST INCORPORATED 1850	MAY 25, 2016 DATE MAYOR AND COMMISSIONERS	STANDARD WATER DETAILS METERED WATER SERVICE (¾'' THRU 3'' & FIRE SUPPLY)	W–15 2 OF 2

NOTE: INSTALLATION FROM METER TO BUILDING AND INSIDE BUILDING SHALL MEET CECIL COUNTY REQUIREMENTS.

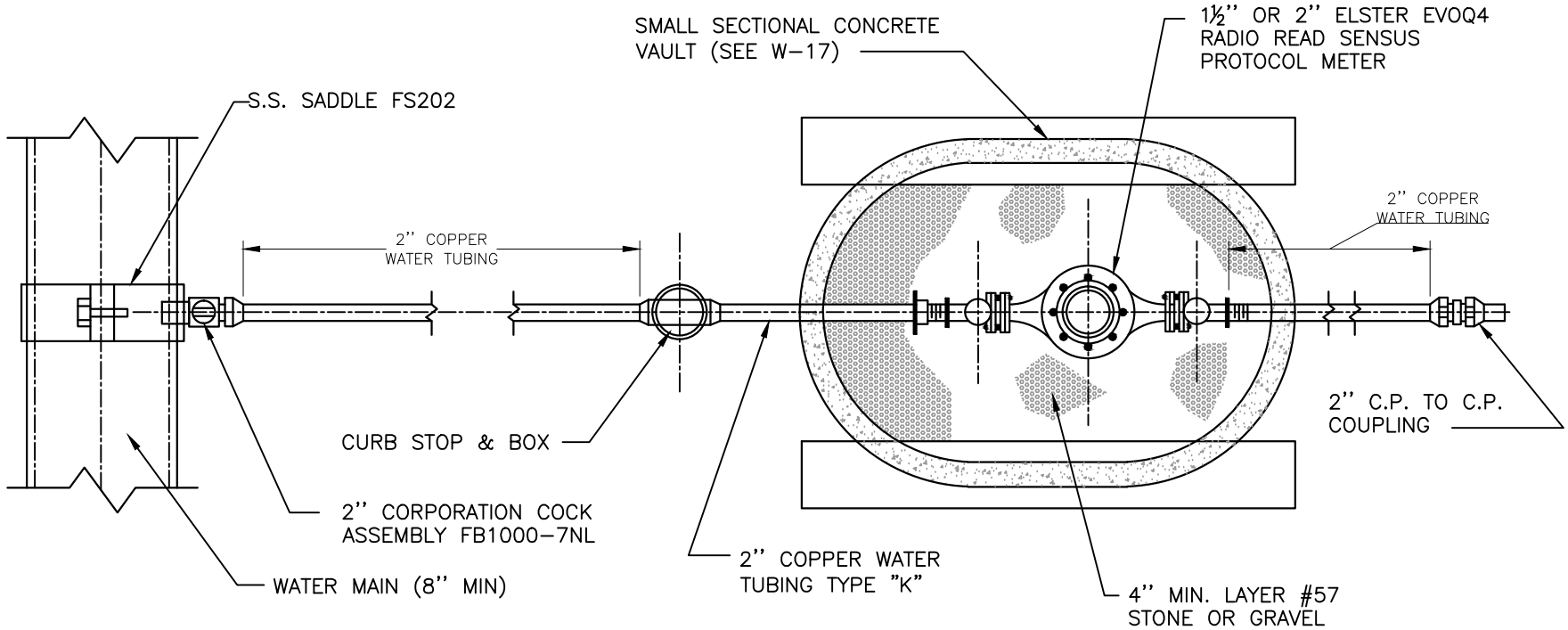

NOTE:
WHEN REQUIRED BY STANDARD DETAIL W–5, OUTSIDE PRESSURE REDUCING VALVE (PRV) SHALL BE INSTALLED IN A STANDARD 18''ø x 30'' PVC METER VAULT BETWEEN THE CURB STOP AND METER VAULT. PRV SHALL BE 2'' WILKINS MODEL 500XLHTSTSC (NO SUBSTITUTION). FURNISH & INSTALL PRESSURE GAGES, RELIEF VALVE AND LOW FLOW PRV (IF REQUIRED BY WILKINS). SUBMIT MANUFACTURER'S SHOP DRAWING SHOWING PROPOSED ARRANGEMENT TO TOWN ENGINEER FOR REVIEW AND APPROVAL.

FOR ADDITIONAL NOTES: SEE SHEET 2 OF 2

TOWN OF NORTH EAST
INCORPORATED 1850

APPROVED: MAY 25, 2016
DATE

MAYOR AND COMMISSIONERS

STANDARD WATER DETAILS

STANDARD INSTALLATION 2'' METERED DOMESTIC SERVICE (1–1/2'' OR 2'' METER)

W–16

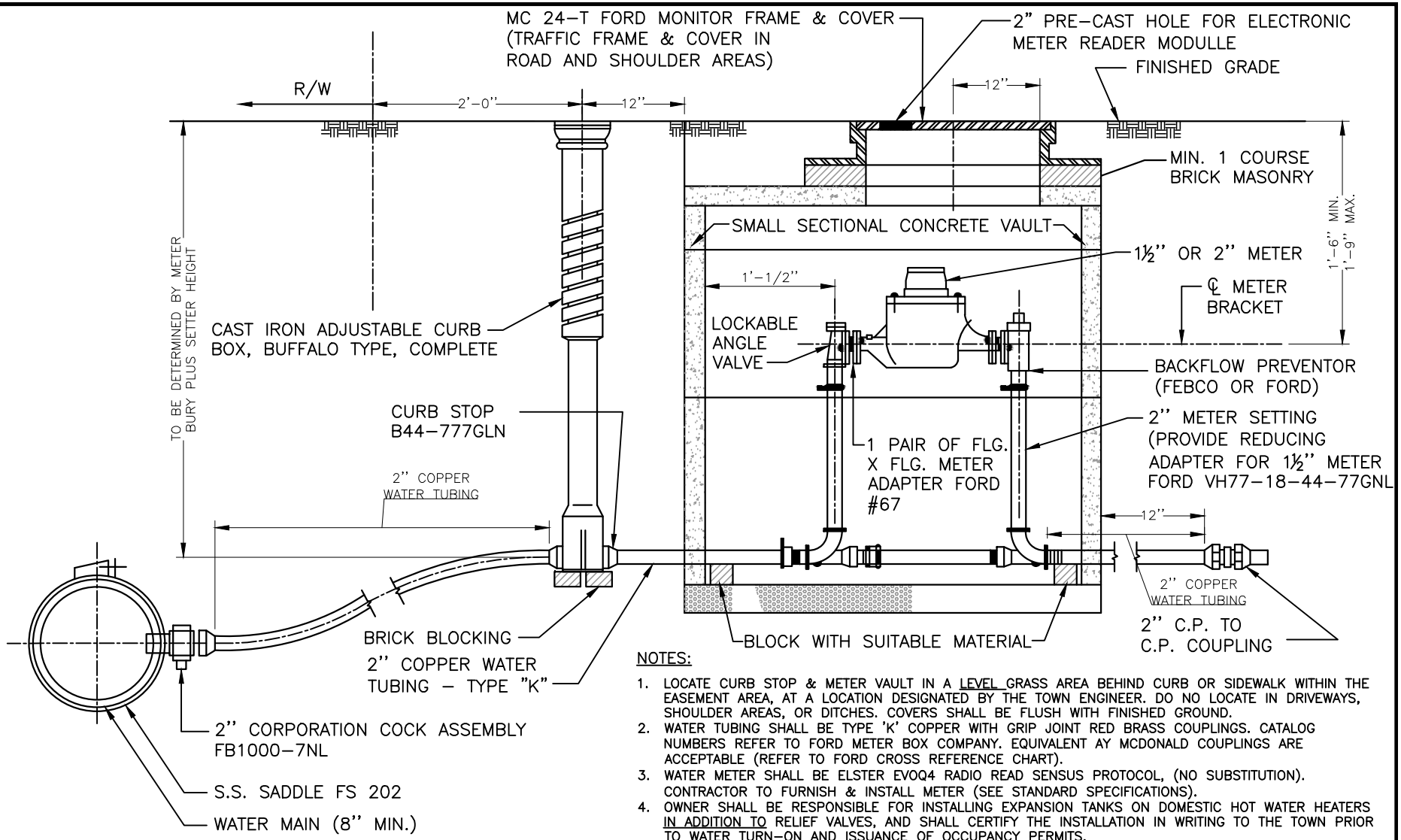

NOTES:

1. LOCATE CURB STOP & METER VAULT IN A LEVEL GRASS AREA BEHIND CURB OR SIDEWALK WITHIN THE EASEMENT AREA, AT A LOCATION DESIGNATED BY THE TOWN ENGINEER. DO NO LOCATE IN DRIVEWAYS, SHOULDER AREAS, OR DITCHES. COVERS SHALL BE FLUSH WITH FINISHED GROUND.
2. WATER TUBING SHALL BE TYPE 'K' COPPER WITH GRIP JOINT RED BRASS COUPLINGS. CATALOG NUMBERS REFER TO FORD METER BOX COMPANY. EQUIVALENT AY MCDONALD COUPLINGS ARE ACCEPTABLE (REFER TO FORD CROSS REFERENCE CHART).
3. WATER METER SHALL BE ELSTER EVOQ4 RADIO READ SENSUS PROTOCOL, (NO SUBSTITUTION). CONTRACTOR TO FURNISH & INSTALL METER (SEE STANDARD SPECIFICATIONS).
4. OWNER SHALL BE RESPONSIBLE FOR INSTALLING EXPANSION TANKS ON DOMESTIC HOT WATER HEATERS IN ADDITION TO RELIEF VALVES, AND SHALL CERTIFY THE INSTALLATION IN WRITING TO THE TOWN PRIOR TO WATER TURN–ON AND ISSUANCE OF OCCUPANCY PERMITS.
5. SEE STANDARD SPECIFICATIONS FOR UTILITY EASEMENT TO BE PROVIDED.

TOWN OF NORTH EAST
INCORPORATED 1850

APPROVED: MAY 25, 2016
DATE

MAYOR AND COMMISSIONERS

STANDARD WATER DETAILS

STANDARD INSTALLATION 2" METERED DOMESTIC SERVICE (1–1/2" OR 2" METER)

W–16

2 OF 2

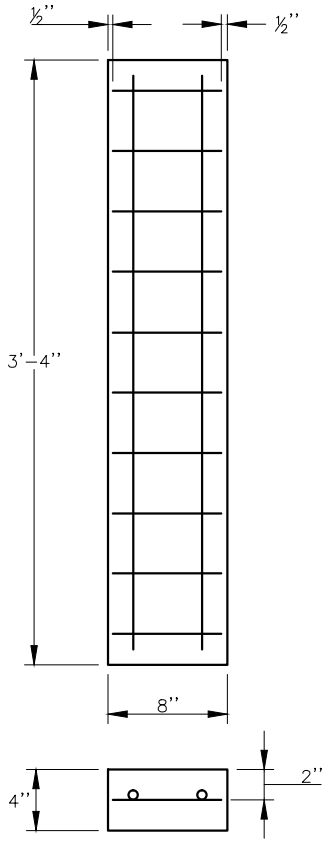

SECTION "A"

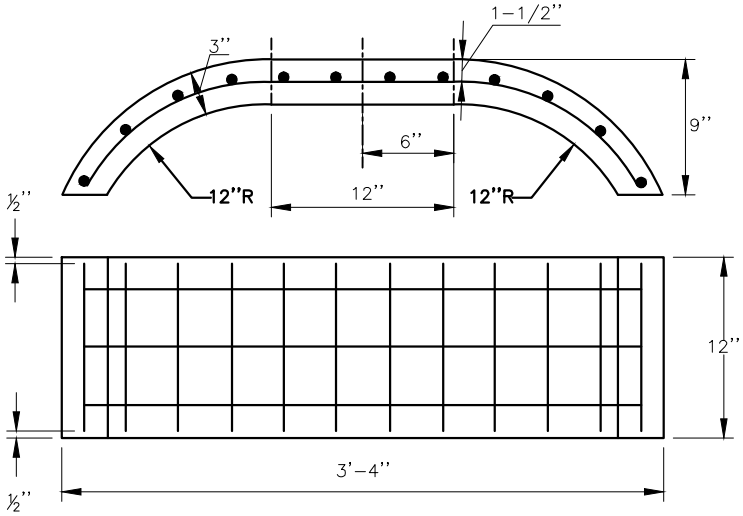

SECTION "B"

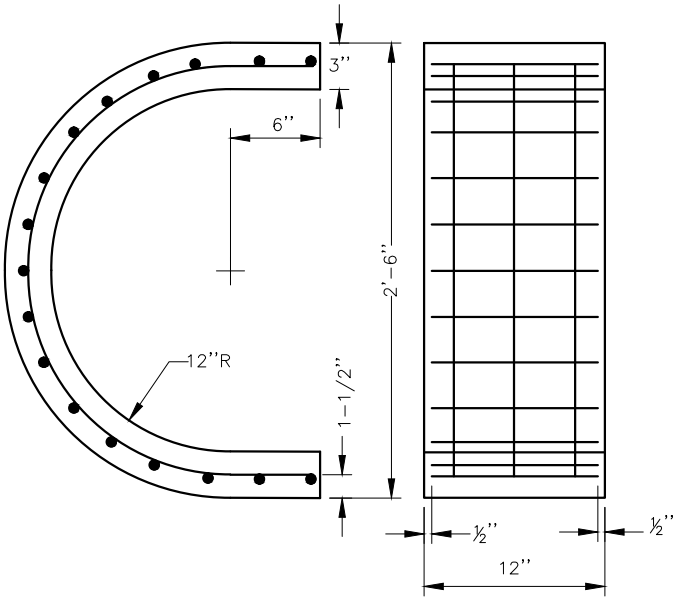

SECTION "C"

NOTE:

CONCRETE SHALL BE SHA MIX NO. 3
WIRE MESH SHALL BE 4" x 4" NO. 6 WIRE

TOWN OF NORTH EAST INCORPORATED 1850	JULY 1, 2015 DATE MAYOR AND COMMISSIONERS	STANDARD WATER DETAILS DETAIL OF SMALL SECTIONAL CONCRETE VAULT	W-17 1 OF 2

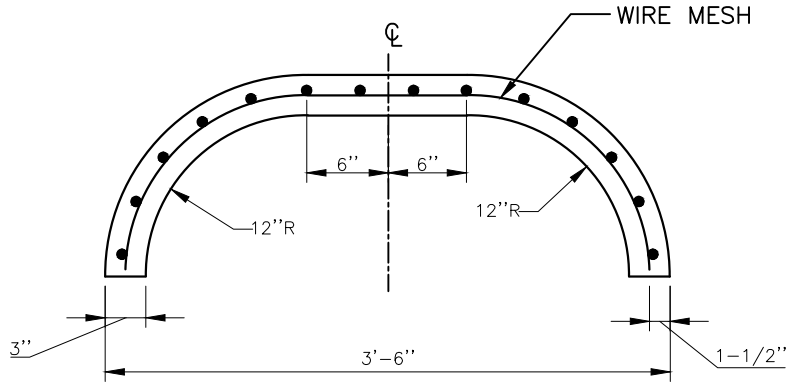

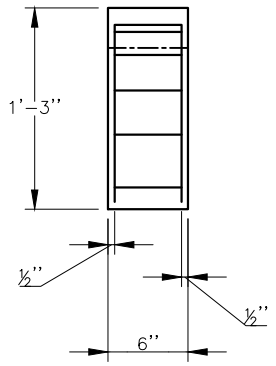

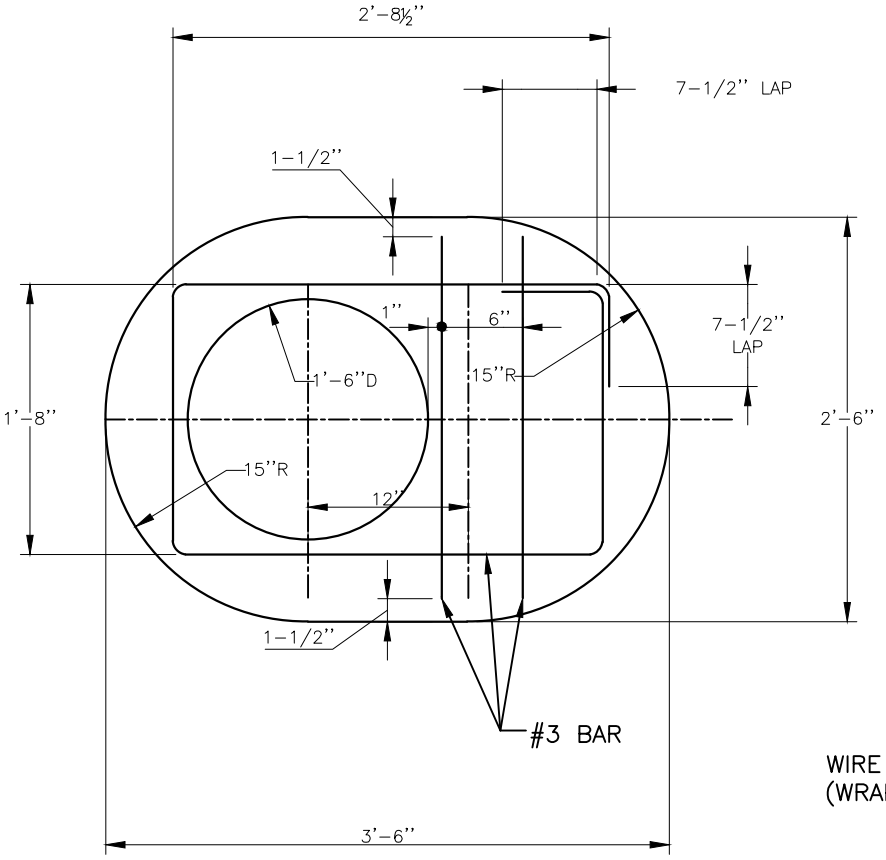

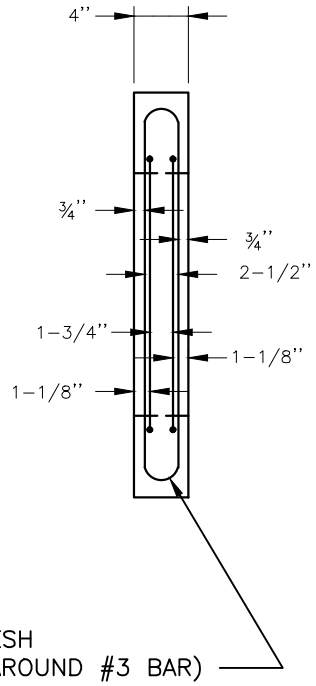

NOTE:

CONCRETE SHALL BE SHA MIX NO. 3.
WIRE MESH SHALL BE 4'' x 4'' NO. 6 WIRE
REINFORCING BARS SHALL BE NO. 3 DEFORMED

TOWN OF NORTH EAST INCORPORATED 1850	JULY 1, 2015 DATE MAYOR AND COMMISSIONERS	STANDARD WATER DETAILS DETAIL OF SMALL SECTIONAL CONCRETE VAULT	W-17 2 OF 2

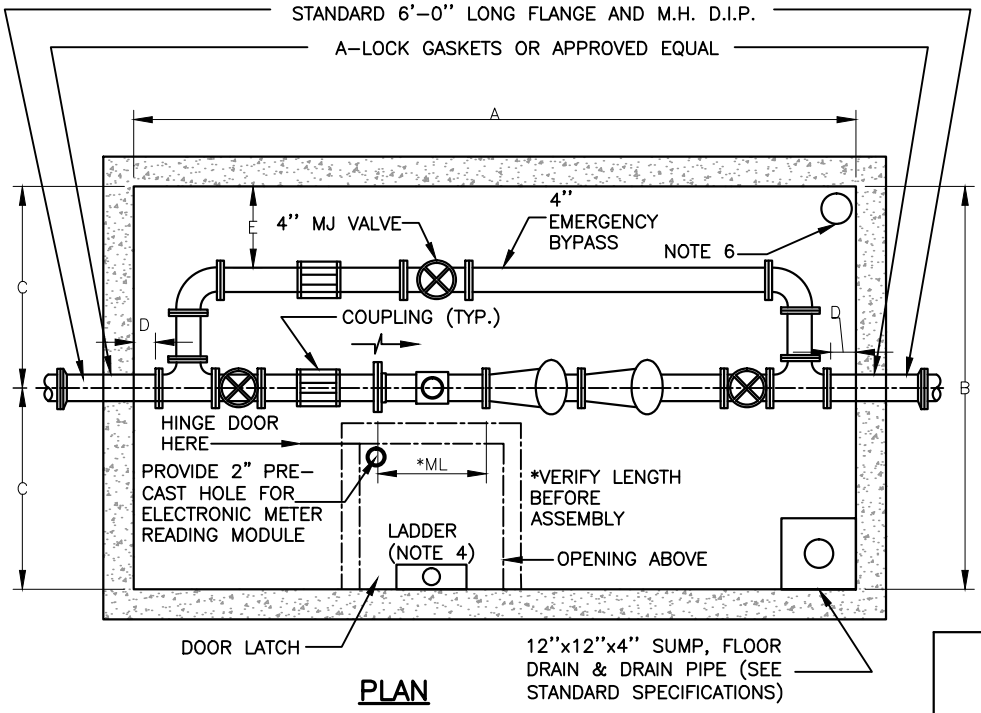

PLAN

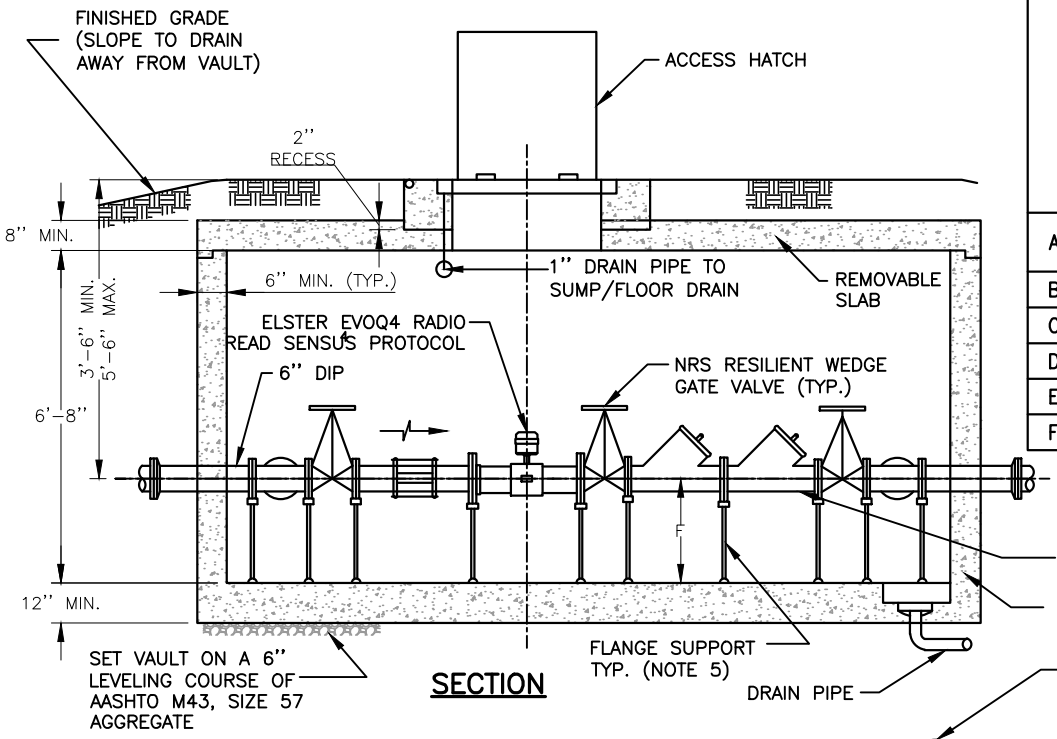

SECTION

	4" SERVICE - 3" METER	6" SERVICE - 3" METER	6" SERVICE - 4" METER
A	11'-4"	12'-10"	12'-10"
B	5'-0"	5'-6"	5'-6"
C	2'-6"	2'-9"	2'-9"
D	9"	11.5"	9"
E	11"	15.5"	15.5"
F	2'-8"	2'-8"	2'-8"

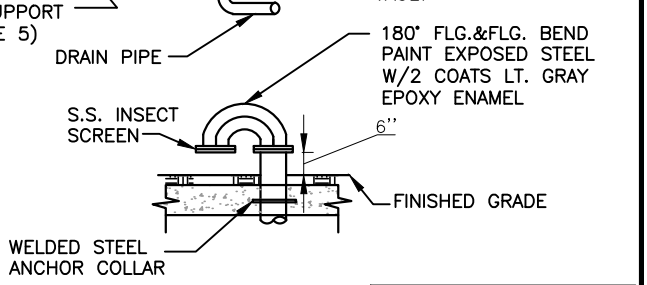

TYPICAL VENT PIPE

NOTES:

1. GATE VALVE REQUIRED AT MAINLINE TAP
2. ALL BOLTS & NUTS TO BE S.S.
3. INSTALLATION FROM METER VAULT TO BUILDING AND INSIDE BUILDING SHALL MEET CECIL COUNTY REQUIREMENTS.
4. LADDER SHALL BE MOSHA ALUMINUM LADDER WITH SAFETY EXTENSION BAR AGAINST OUTSIDE BAR OF LADDER
5. FLANGE SUPPORTS SHALL BE STANDON MODEL S89.
6. 6" FLANGED VENT PIPE – EXTEND TO 1-FT. ABOVE FLOOR. SEE DETAIL THIS SHEET.

FOR ADDITIONAL NOTES: SEE SHEET 2 OF 2

TOWN OF NORTH EAST INCORPORATED 1850

MAY 25, 2016
DATE

MAYOR AND COMMISSIONERS

STANDARD WATER DETAILS

STD. INSTALLATION 4" & 6" DOM. WATER SUPPLY SERVICE (3" & 4" METER)

W-18

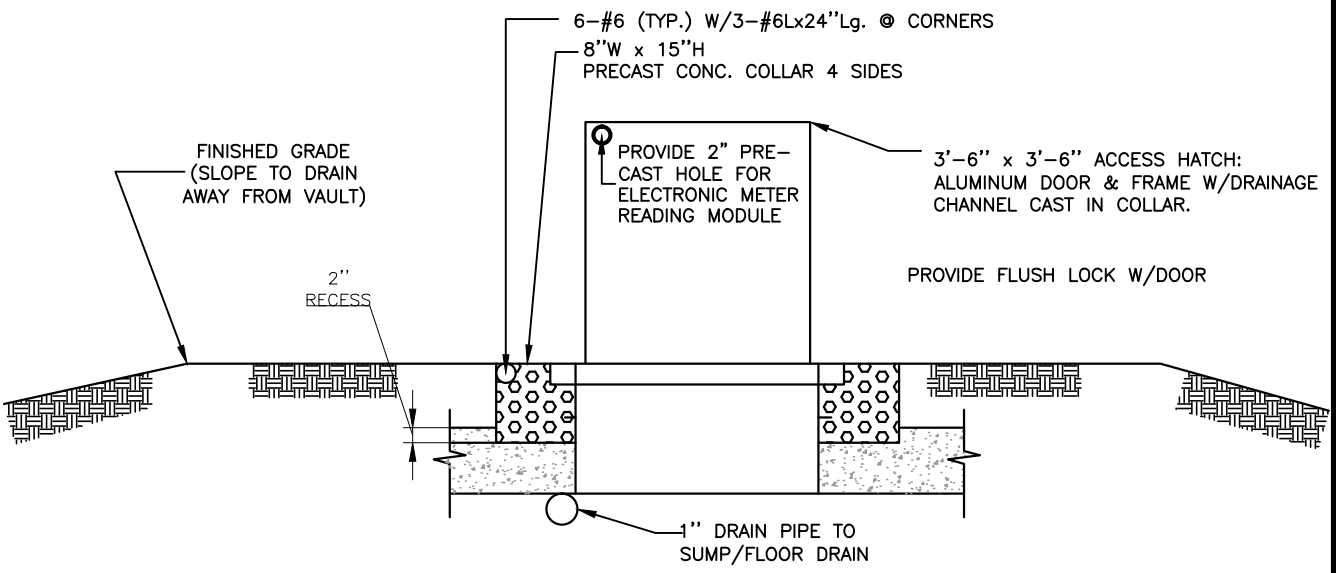

ACCESS HATCH DETAIL

ACCESS HATCH NOTES:

1. OFF-STREET GRASS AREA LOCATIONS (PREFERRED)-BILCO MODEL JH-20
2. ROADWAYS-BILCO MODEL HLC.
3. IN OFF-STREET PAVED AREAS TOP OF VAULT TO BE 1'-0" ABOVE PAVING W/6" SCH.80 STEEL PIPE BOLLARDS 7'-0" LG. (3'-0" BURIED) FILLED WITH CONCRETE & PAINTED YELLOW. FOUR REQUIRED, ONE AT EACH CORNER.
4. LOADS: LL = AASHTO H-20; DL = EARTH@100 PCF AND 42 PCF EQUIV. FLUID PRESSURE

NOTES:

1. METER SHALL BE ELSTER EVOQ4 RADIO READ SENSUS PROTOCOL. CONTRACTOR TO FURNISH & INSTALL METER (SEE STANDARD SPECIFICATIONS).
2. PRECAST VAULTS SHALL BE AS MANUFACTURED BY A.C. MILLER CONCRETE PRODUCTS CO, ROTONDO-PENN CAST, OR APPROVED EQUAL. SUBMIT VAULT DESIGN TO TOWN ENGINEERS FOR REVIEW AND APPROVAL.
3. VALVES SHALL BE TOWN STANDARD.
4. WHEN REQUIRED BY STANDARD DETAIL W-5, OUTSIDE PRESSURE REDUCING VALVE (PRV) SHALL BE INSTALLED IN A SEPARATE VAULT BETWEEN THE MAINLINE VALVE AND THE METER VAULT. PRV SHALL BE CLA-VAL SUSTAIN PRESSURE TYPE (NO SUBSTITUTION) WITH PRESSURE GATES, RELIEF VALVE AND LOW FLOW PRV (IF REQUIRED BY CLA-VAL). SUBMIT DESIGN FOR TOWN ENGINEER'S REVIEW AND APPROVAL.
5. ALL PROPOSED PIPING CONFIGURATION, VALVES, BACKFLOW PREVENTER, METER, PRV, VAULT, MAINLINE CONNECTION, AND ALL APPURTENANCES SHALL BE SUBMITTED FOR ENGINEER'S REVIEW AND APPROVAL.
6. OWNER SHALL BE RESPONSIBLE FOR INSTALLING EXPANSION TANKS ON DOMESTIC HOT WATER HEATERS IN ADDITION TO RELIEF VALVES, AND SHALL CERTIFY THE INSTALLATION IN WRITING TO THE TOWN PRIOR TO WATER TURN-ON AND ISSUANCE OF OCCUPANCY PERMIT.
7. LOCATE METER VAULT IN LEVEL GRASS AREA BEHIND CURB OR SIDEWALK WITHIN THE EASEMENT AREA, AT A LOCATION DESIGNATED BY THE TOWN ENGINEER. DO NO LOCATE IN DRIVEWAYS, SHOULDER AREAS, OR DITCHES. HATCH DOOR SHALL BE FLUSH WITH FINISHED GROUND, EXCEPT SEE NO. 3 UNDER "ACCESS HATCH NOTES:."
8. CONTRACTOR SHALL BLOCK GATE VALVES EACH SIDE OF METER VAULT & TEST SERVICE MAIN THRU BYPASS.
9. SEE STANDARD SPECIFICATIONS FOR UTILITY EASEMENT TO BE PROVIDED.
10. ALL VAULT PENETRATIONS SHALL BE WATERTIGHT.

TOWN OF NORTH EAST INCORPORATED 1850	MAY 25, 2016 DATE MAYOR AND COMMISSIONERS	STANDARD WATER DETAILS STD. INSTALLATION 4" & 6" DOM. WATER SUPPLY SERVICE (3' & 4" METER)	W-18 2 OF 2

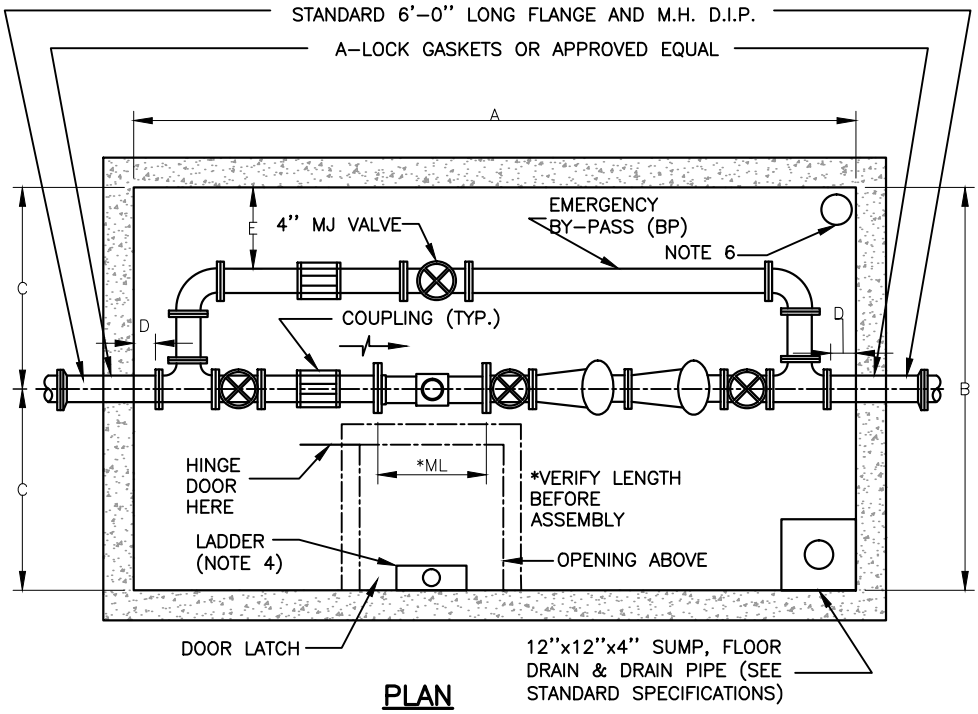

PLAN

A	12'-10"
B	5'-6"
C	2'-9"
D	14.5"
E	14.5"
F	2'-8"
BP	6"

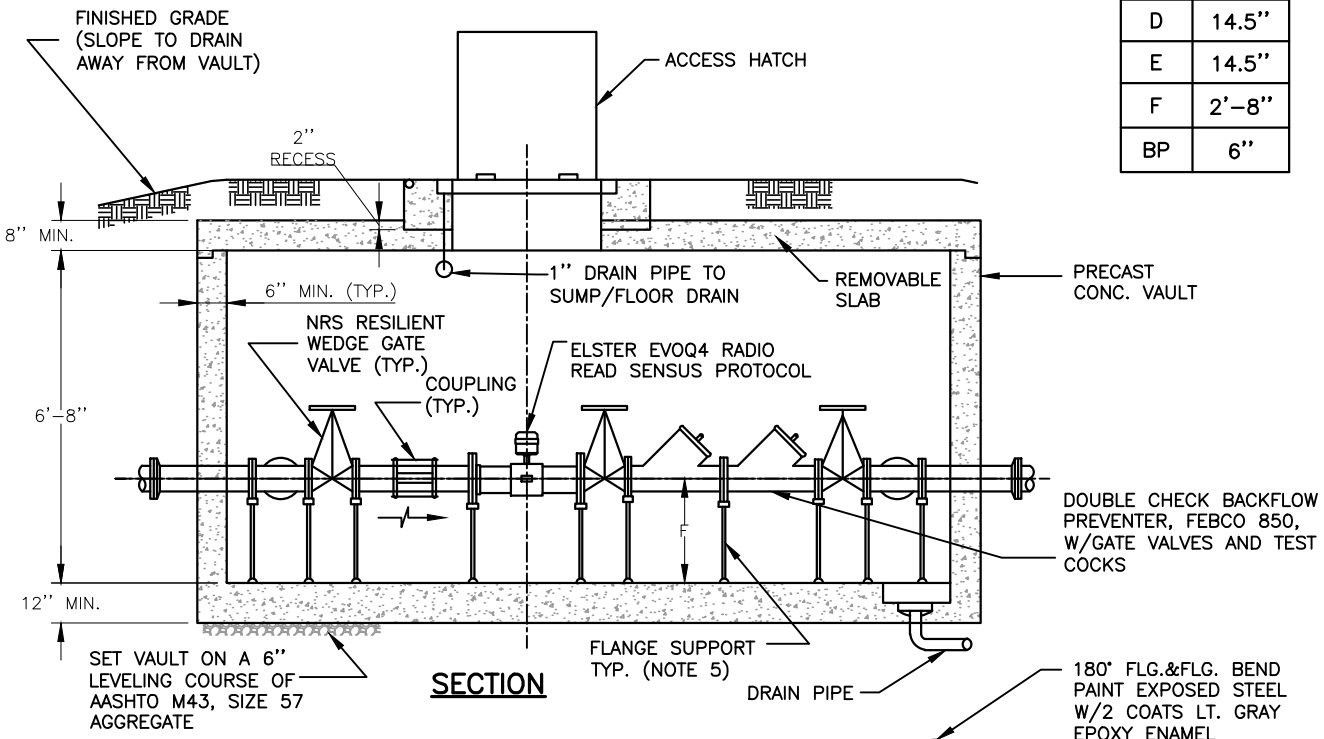

SECTION

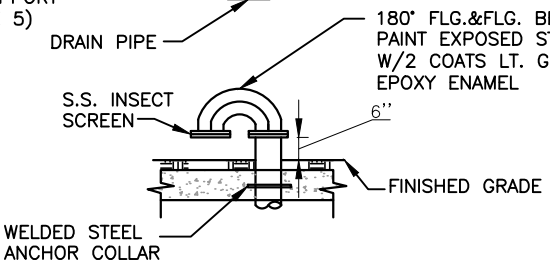

TYPICAL VENT PIPE

NOTES:

1. GATE VALVE REQUIRED AT MAINLINE TAP
2. ALL BOLTS & NUTS TO BE S.S.
3. INSTALLATION FROM METER VAULT TO BUILDING AND INSIDE BUILDING SHALL MEET CECIL COUNTY REQUIREMENTS.
4. LADDER SHALL BE MOSHA ALUMINUM LADDER WITH SAFETY EXTENSION BAR AGAINST OUTSIDE BAR OF LADDER
5. FLANGE SUPPORTS SHALL BE STANDON MODEL S89.
6. 6" FLANGED VENT PIPE – EXTEND TO 1-FT. ABOVE FLOOR. SEE DETAIL THIS SHEET.

FOR ADDITIONAL NOTES:
SEE SHEET 2 OF 2

TOWN OF NORTH EAST
INCORPORATED 1850

MAY 25, 2016
DATE

MAYOR AND COMMISSIONERS

STANDARD WATER DETAILS

STD. INSTALLATION 6" DOM. WATER SUPPLY SERVICE (6" METER)

W-19

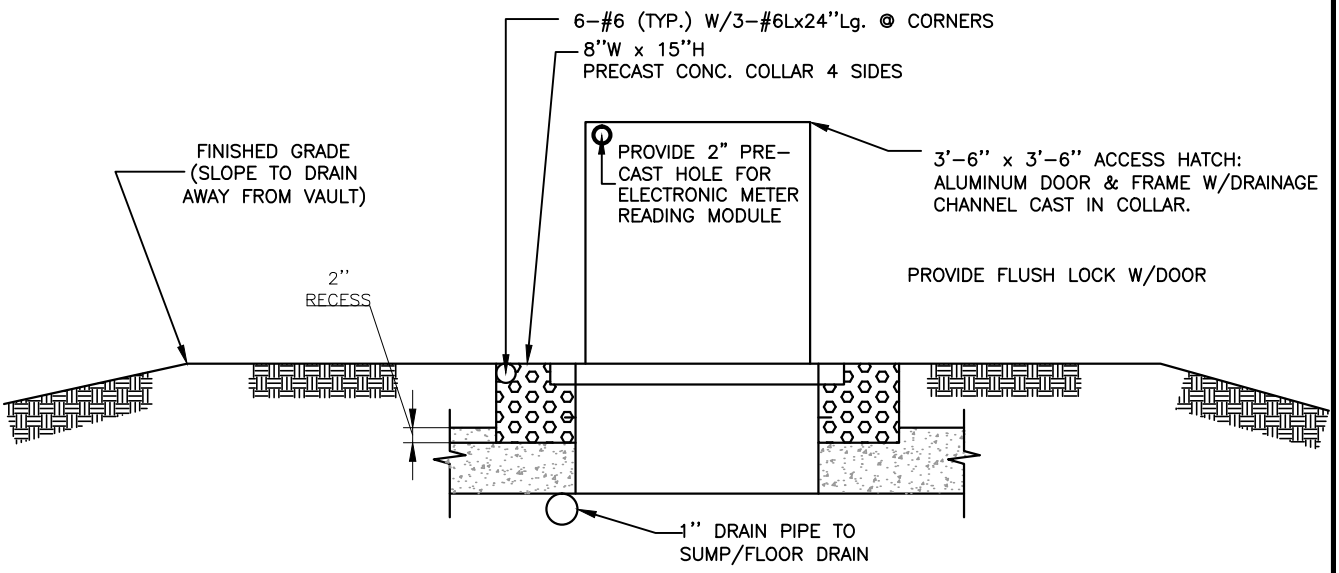

ACCESS HATCH DETAIL

ACCESS HATCH NOTES:

1. OFF-STREET GRASS AREA LOCATIONS (PREFERRED)-BILCO MODEL JH-20
2. ROADWAYS-BILCO MODEL HLC.
3. IN OFF-STREET PAVED AREAS TOP OF VAULT TO BE 1'-0" ABOVE PAVING W/6" SCH.80 STEEL PIPE BOLLARDS 7'-0" LG. (3'-0" BURIED) FILLED WITH CONCRETE & PAINTED YELLOW. FOUR REQUIRED, ONE AT EACH CORNER.
4. LOADS: LL = AASHTO H-20; DL = EARTH@100 PCF AND 42 PCF EQUIV. FLUID PRESSURE

NOTES:

1. COMPOUND METER SHALL BE ELSTER EVOQ4 RADIO READ SENSUS PROTCOL AS SUPPLIED BY M&C SALES (NO SUBSTITUTIONS). CONTRACTOR TO FURNISH & INSTALL METER (SEE STANDARD SPECIFICATIONS).
2. PRECAST VAULTS SHALL BE AS MANUFACTURED BY A.C. MILLER CONCRETE PRODUCTS CO, ROTONDO-PENN CAST, OR APPROVED EQUAL. SUBMIT VAULT DESIGN TO TOWN ENGINEERS FOR REVIEW AND APPROVAL.
3. VALVES SHALL BE TOWN STANDARD.
4. WHEN REQUIRED BY STANDARD DETAIL W-5, OUTSIDE PRESSURE REDUCING VALVE (PRV) SHALL BE INSTALLED IN A SEPARATE VAULT BETWEEN THE MAINLINE VALVE AND THE METER VAULT. PRV SHALL BE CLA-VAL SUSTAIN PRESSURE TYPE (NO SUBSTITUTION) WITH PRESSURE GATES, RELIEF VALVE AND LOW FLOW PRV (IF REQUIRED BY CLA-VAL). SUBMIT DESIGN FOR TOWN ENGINEER'S REVIEW AND APPROVAL.
5. ALL PROPOSED PIPING CONFIGURATION, VALVES, BACKFLOW PREVENTER, METER, PRV, VAULT, MAINLINE CONNECTION, AND ALL APPURTENANCES SHALL BE SUBMITTED FOR ENGINEER'S REVIEW AND APPROVAL.
6. OWNER SHALL BE RESPONSIBLE FOR INSTALLING EXPANSION TANKS ON DOMESTIC HOT WATER HEATERS IN ADDITION TO RELIEF VALVES, AND SHALL CERTIFY THE INSTALLATION IN WRITING TO THE TOWN PRIOR TO WATER TURN-ON AND ISSUANCE OF OCCUPANCY PERMIT.
7. LOCATE METER VAULT IN LEVEL GRASS AREA BEHIND CURB OR SIDEWALK WITHIN THE EASEMENT AREA, AT A LOCATION DESIGNATED BY THE TOWN ENGINEER. DO NO LOCATE IN DRIVEWAYS, SHOULDER AREAS, OR DITCHES. HATCH DOOR SHALL BE FLUSH WITH FINISHED GROUND, EXCEPT SEE NO. 3 UNDER "ACCESS HATCH NOTES:."
8. CONTRACTOR SHALL BLOCK GATE VALVES EACH SIDE OF METER VAULT & TEST SERVICE MAIN THRU BYPASS.
9. SEE STANDARD SPECIFICATIONS FOR UTILITY EASEMENT TO BE PROVIDED.
10. ALL VAULT PENETRATIONS SHALL BE WATERTIGHT.

TOWN OF NORTH EAST INCORPORATED 1850	MAY 25, 2016 DATE MAYOR AND COMMISSIONERS	STANDARD WATER DETAILS STD. INSTALLATION 6" DOM. WATER SUPPLY SERVICE (6" METER)	W-19 2 OF 2

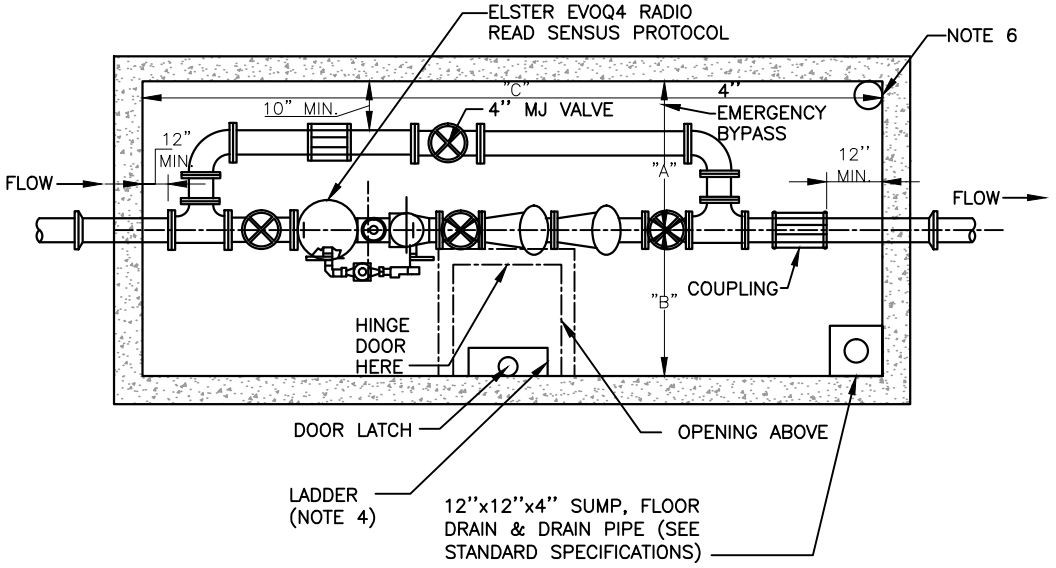

PLAN

METER SIZE*	A	B	C
4"	31	47	152
6"	32	51	180
8"	34	57	202
10"	38	66	230

DIMENSIONS IN INCHES
*FIRE LINE SIZE

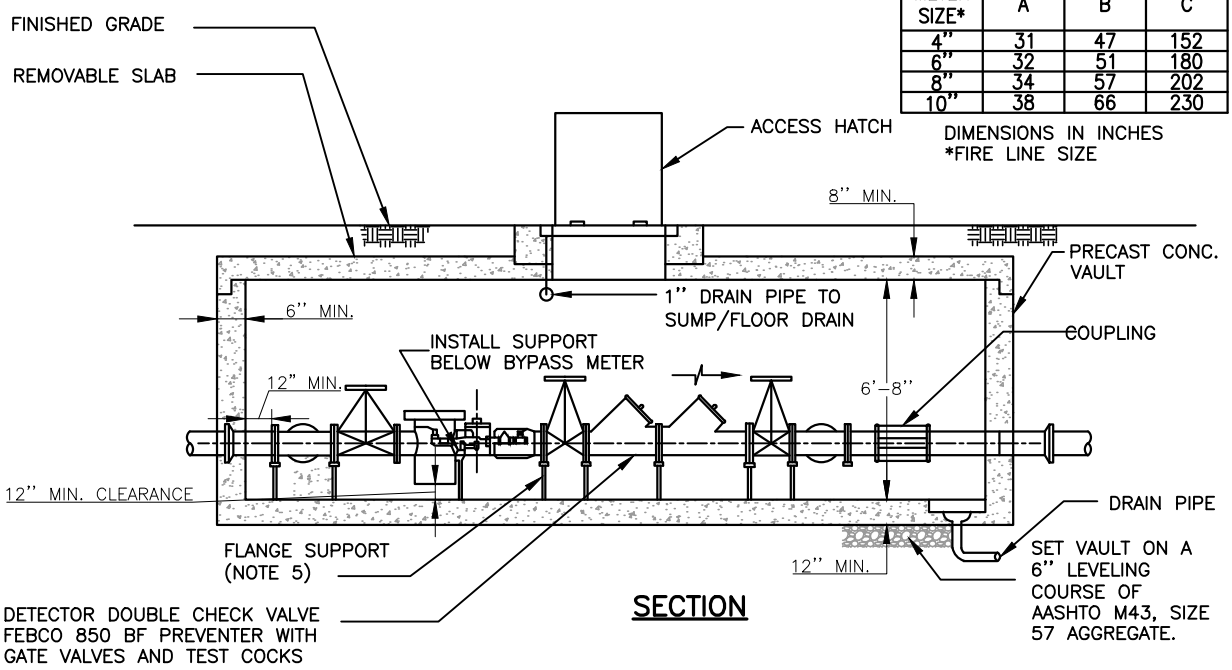

SECTION

NOTES:

1. GATE VALVE REQUIRED AT MAINLINE TAP
2. ALL BOLTS & NUTS TO BE S.S.
3. INSTALLATION FROM METER VAULT TO BUILDING AND INSIDE BUILDING SHALL MEET CECIL COUNTY REQUIREMENTS.
4. LADDER SHALL BE MOSHA ALUMINUM LADDER WITH SAFETY EXTENSION BAR AGAINST OUTSIDE BAR OF LADDER
5. FLANGE SUPPORTS SHALL BE STANDON MODEL S89
6. 6" FLANGED VENT PIPE – EXTEND TO 1-FT. ABOVE FLOOR. SEE DETAIL THIS SHEET.

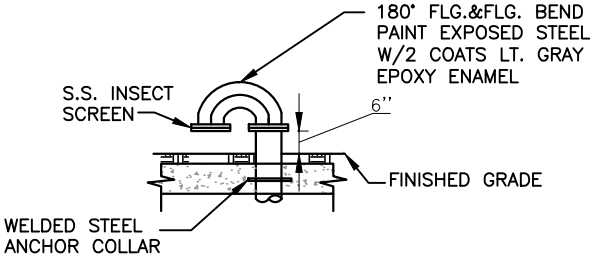

TYPICAL VENT PIPE

FOR ADDITIONAL NOTES:
SEE SHEET 2 OF 2

TOWN OF NORTH EAST INCORPORATED 1850	MAY 25, 2016 DATE MAYOR AND COMMISSIONERS	STANDARD WATER DETAILS STD. INSTALLATION FOR 4" THRU 10" COMBINED FIRE AND DOMESTIC SERVICE	W-20 1 OF 2

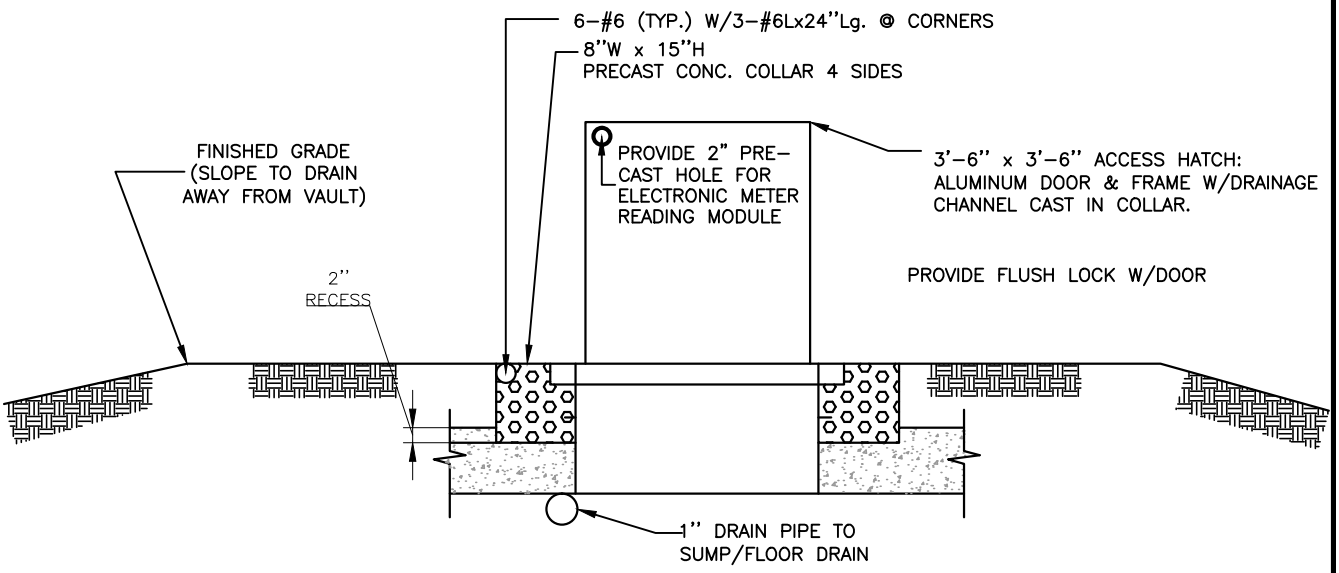

ACCESS HATCH DETAIL

ACCESS HATCH NOTES:

1. OFF-STREET GRASS AREA LOCATIONS (PREFERRED)-BILCO MODEL JH-20
2. ROADWAYS-BILCO MODEL HLC.
3. IN OFF-STREET PAVED AREAS TOP OF VAULT TO BE 1'-0" ABOVE PAVING W/6" SCH.40 STEEL PIPE BOLLARDS 7'-0" LG. (3'-0" BURIED) FILLED WITH CONCRETE & PAINTED YELLOW. FOUR REQUIRED, ONE AT EACH CORNER.
4. LOADS: LL = AASHTO H-20; DL = EARTH@100 PCF AND 42 PCF EQUIV. FLUID PRESSURE

NOTES:

1. METER SHALL BE ELSTER EVOQ4 RADIO READ SENSUS PROTCOL, AS SUPPLIED BY M&C SALES (NO SUBSTITUTIONS). CONTRACTOR TO FURNISH & INSTALL METER (SEE STANDARD SPECIFICATIONS).
2. LOCATE METER VAULT IN LEVEL GRASS AREA BEHIND CURB OR SIDEWALK WITHIN THE EASEMENT AREA, AT A LOCATION DESIGNATED BY THE TOWN ENGINEER. DO NO LOCATE IN DRIVEWAYS, SHOULDER AREAS, OR DITCHES. HATCH DOOR SHALL BE FLUSH WITH FINISHED GROUND EXCEPT SEE 3, UNDER "ACCESS HATCH NOTES:."
3. OWNER SHALL BE RESPONSIBLE FOR INSTALLING EXPANSION TANKS ON DOMESTIC HOT WATER HEATERS IN ADDITION TO RELIEF VALVES, AND SHALL CERTIFY THE INSTALLATION IN WRITING TO THE TOWN PRIOR TO WATER TURN-ON AND ISSUANCE OF OCCUPANCY PERMIT.
4. WATER SERVICE PIPE MATERIAL SHALL BE AS FOLLOWS: D.I.P. MIN. CLASS 51
5. PRECAST VAULTS SHALL BE AS MANUFACTURED BY A.C. MILLER CONCRETE PRODUCTS CO., ROTONDO-PENN CAST, OR APPROVED EQUAL. SUBMIT VAULT DESIGN TO TOWN ENGINEER FOR REVIEW AND APPROVAL.
6. VALVES SHALL BE TOWN STANDARD
7. WHEN REQUIRED BY STANDARD DETAIL W-5, OUTSIDE PRESSURE REDUCING VALVE (PRV) SHALL BE INSTALLED IN A SEPARATE VAULT BETWEEN THE MAINLINE VALVE AND THE METER VAULT. PRV SHALL BE CLA-VAL SUSTAIN PRESSURE TYPE (NO SUBSTITUTION) WITH PRESSURE GATES, RELIEF VALVE AND LOW FLOW PRV (IF REQUIRED BY CLA-VAL). SUBMIT DESIGN FOR TOWN ENGINEER'S REVIEW AND APPROVAL.
8. CONTRACTOR SHALL BLOCK GATE VALVES EACH SIDE OF METER VAULT & TEST SERVICE MAIN THRU BYPASS.
9. SEE STANDARD SPECIFICATIONS FOR UTILITY EASEMENT TO BE PROVIDED.
10. ALL VAULT PENETRATIONS SHALL BE WATERTIGHT.

TOWN OF NORTH EAST INCORPORATED 1850	MAY 25, 2016 DATE MAYOR AND COMMISSIONERS	STANDARD WATER DETAILS STD. INSTALLATION FOR 4" THRU 10" COMBINED FIRE AND DOMESTIC SERVICE	W-20 2 OF 2

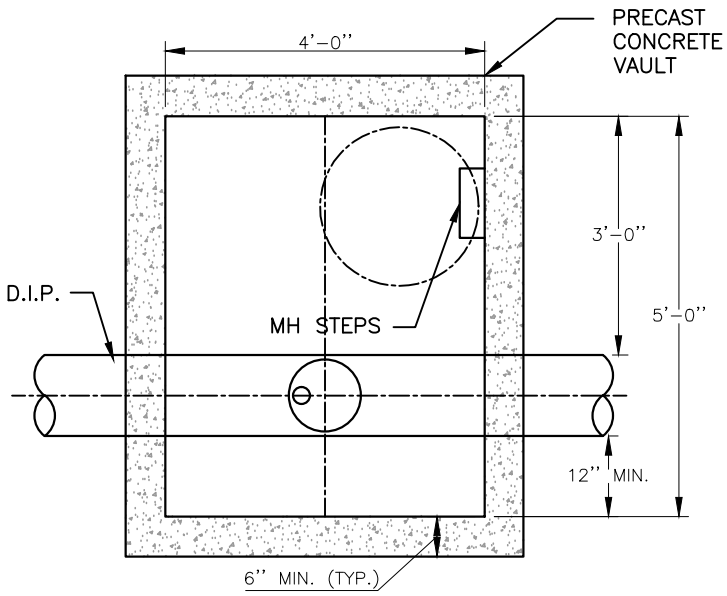

PLAN

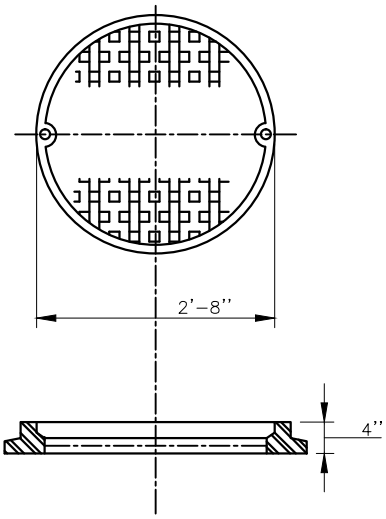

30"ø C.I. TRAFFIC FRAME & COVER

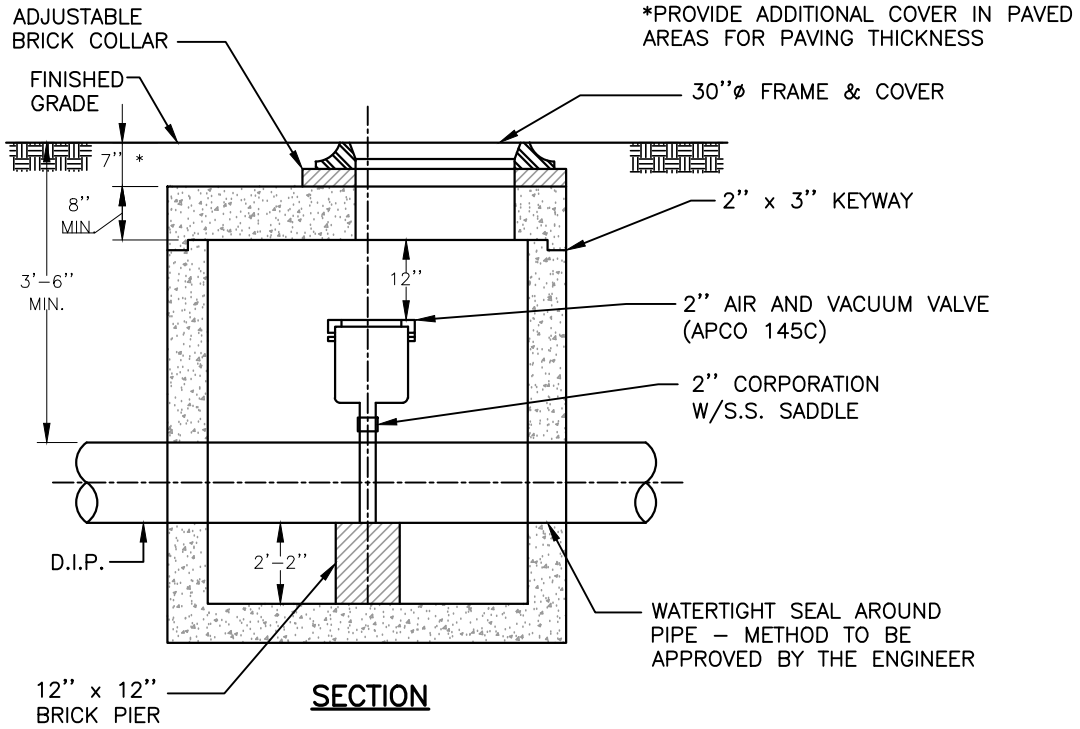

SECTION

NOTES:

1. VAULTS SHALL BE PRECAST CONCRETE AS MANUFACTURED BY A.C. MILLER, ROTONDO–PENNCAST, OR APPROVED EQUAL.
2. MH STEPS SHALL BE M.A. INDUSTRIES, PS 1 POLYPROPYLENE, OR EQUAL, AND MEET MOSHA STDS.

LOADS:

LIVE LOAD = AASHTO HS–20
DEAD LOAD = EARTH @ 120 PCF & 42 PCF EQUIV. FLUID PRESSURE

THIS STANDARD DETAIL WAS REVIEWED AND UPDATED BY DATE ONLY

TOWN OF NORTH EAST INCORPORATED 1850	JULY 1, 2015 DATE MAYOR AND COMMISSIONERS	STANDARD WATER DETAILS AIR RELEASE VALVE AND VAULT FOR 12" AND SMALLER WATER MAINS	W–21 1 OF 1

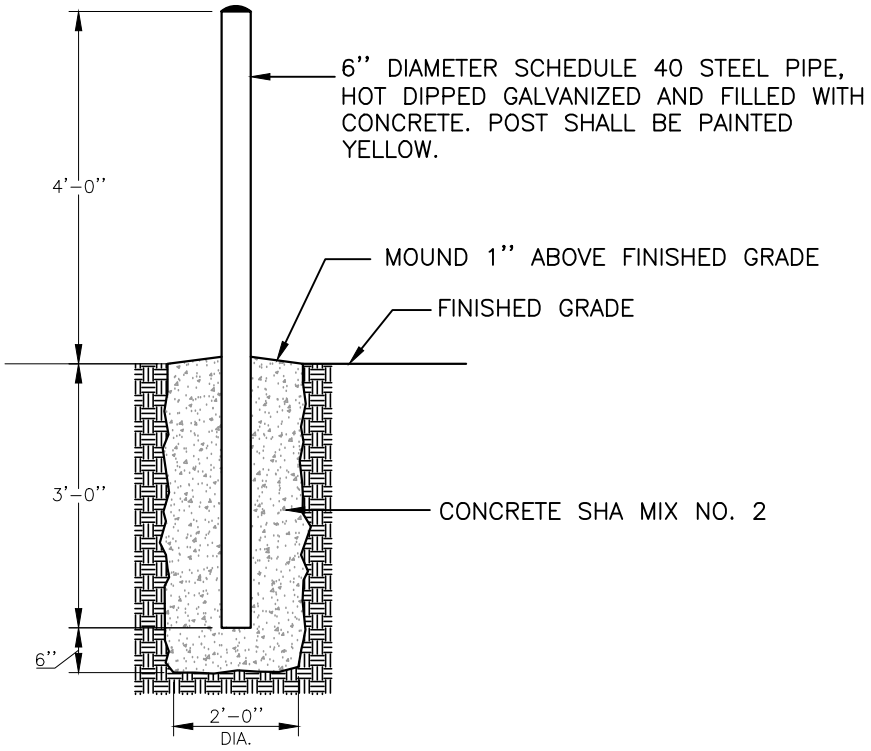

THIS STANDARD DETAIL WAS REVIEWED AND UPDATED BY DATE ONLY

TOWN OF NORTH EAST INCORPORATED 1850	JULY 1, 2015 DATE MAYOR AND COMMISSIONERS	STANDARD WATER DETAILS STANDARD BOLLARD	W-22

PAVING REPAIR CRITERIA

A. EXCAVATIONS FOR UTILITY REPAIR:

1.1. IF FINISHED PATCH DOES NOT CROSS ROAD CENTERLINE AND TOTAL WIDTH IS LESS THAN 50% OF ROAD WIDTH, ONLY DISTURBED PART OF THE ROAD SHALL BE REPAIRED.

1.2. IF FINISHED PATCH COMES TO THE ROAD CENTERLINE OR IS WIDER THAN 50% OF THE ROAD WIDTH, REPAIR SHALL EXTEND ACROSS THE ENTIRE ROADWAY WIDTH.

B. EXCAVATIONS FOR NEW UTILITIES:

TRENCH REPAIR SHALL BE IN ACCORDANCE WITH THE CECIL COUNTY STANDARD ROAD DETAIL R–31. IN ADDITION THE ENTIRE ROADWAY SHALL BE MILLED TO A DEPTH OF 1½" AND BROUGHT BACK TO EXISTING GRADE WITH HMA SUPERPAVE 12.5mm, PG–64–22 FOR SURFACE.

MACADAM ROADWAY – FLEXIBLE TYPE

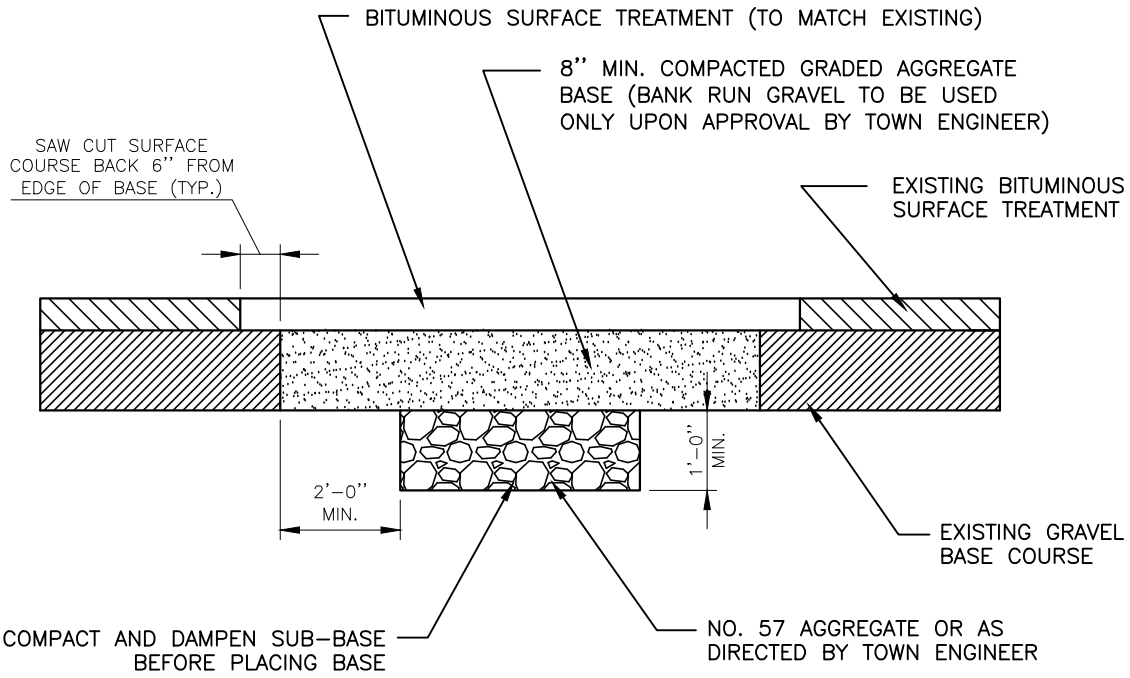

NOTE:

BACKFILL IN TRENCH SHALL BE THOROUGHLY COMPACTED BY TAMPING OR BY SOME OTHER APPROVED METHOD IN 6" LAYERS BEFORE PATCH IS MADE

NO EXCAVATION OR CAVE–IN WILL BE PERMITTED UNDER EXISTING SURFACES AND NO BELLYING OF THE TRENCHES WILL BE ALLOWED. SHEETING OR SHORING WILL BE USED WHEN SO DIRECTED BY ENGINEER.

THIS STANDARD DETAIL WAS REVIEWED AND UPDATED BY DATE ONLY

TOWN OF NORTH EAST INCORPORATED 1850	JULY 1, 2015 DATE MAYOR AND COMMISSIONERS	STANDARD ROADWAY DETAILS PAVING REPAIR CRITERIA	W–23

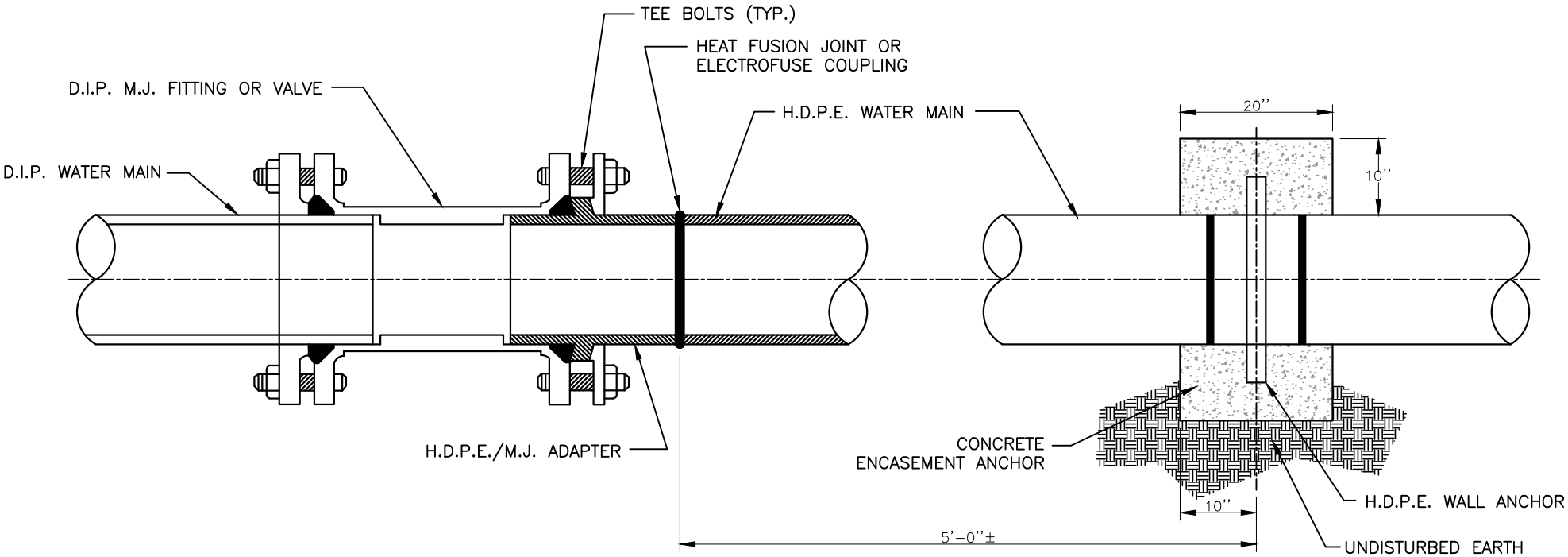

H.D.P.E. AND D.I.P. COUPLING DETAIL

TOWN OF NORTH EAST INCORPORATED 1850	APPROVED: JULY 1, 2015 DATE MAYOR AND COMMISSIONERS	STANDARD WATER DETAILS H.D.P.E./M.J. ADAPTER	W-24 1 OF 2

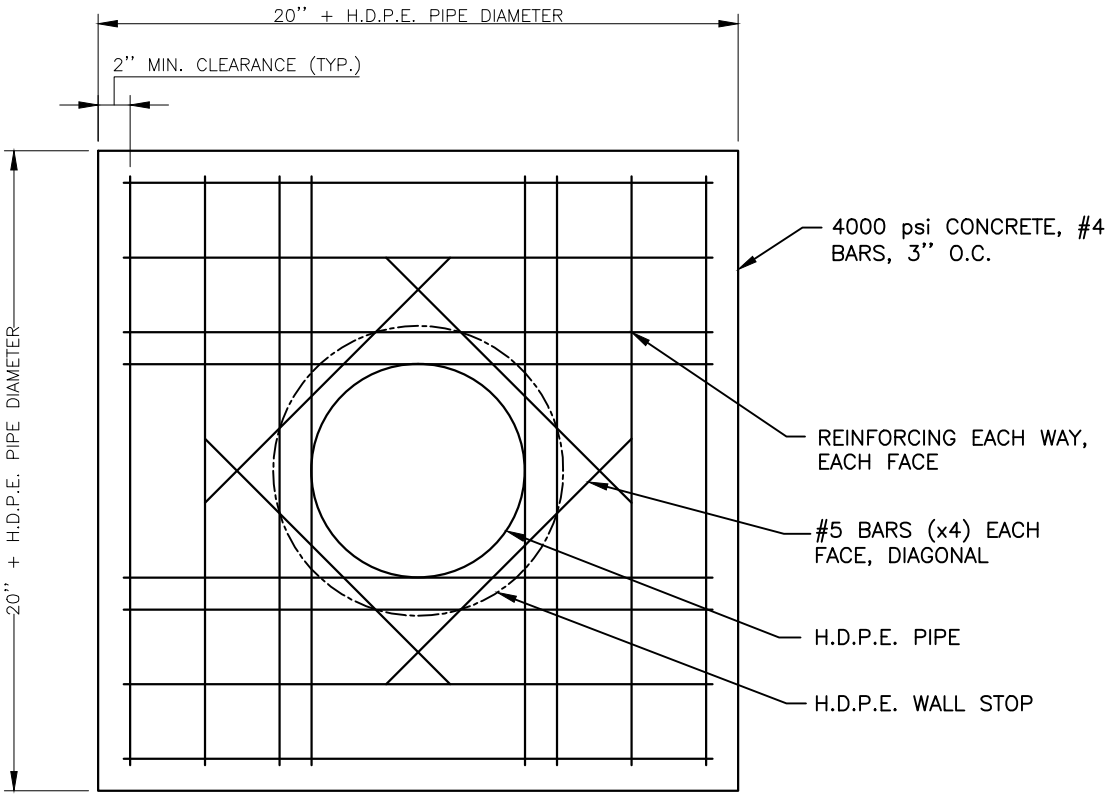

CONCRETE THRUST COLLAR

TOWN OF NORTH EAST INCORPORATED 1850	JULY 1, 2015 DATE MAYOR AND COMMISSIONERS	STANDARD WATER DETAILS H.D.P.E./M.J. ADAPTER	W-24 2 OF 2

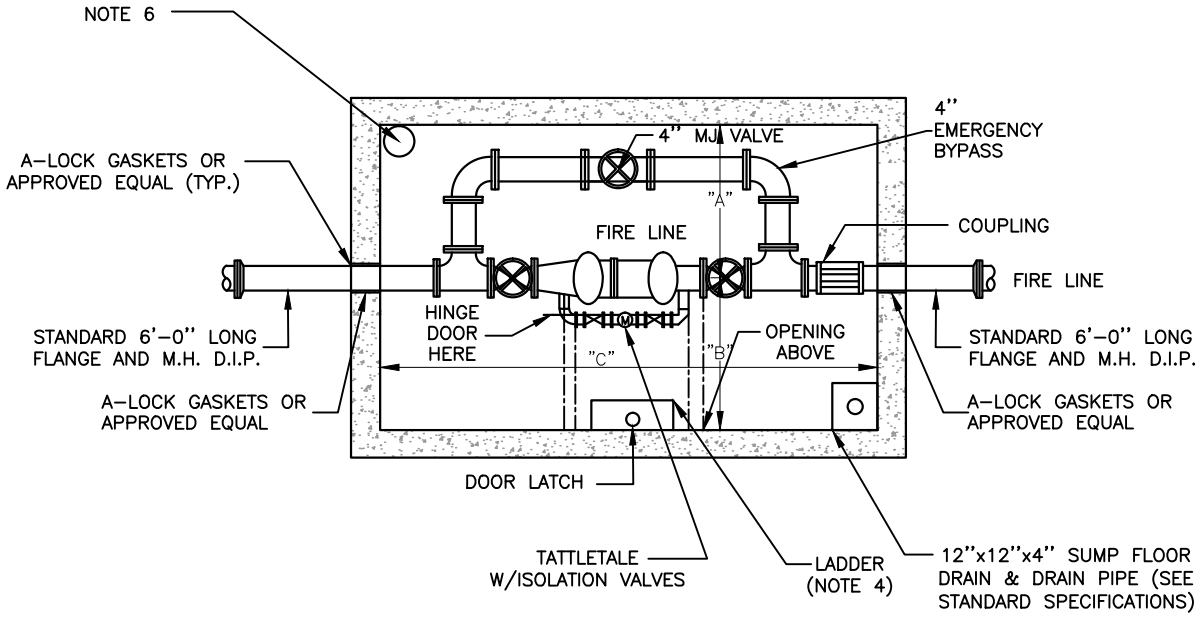

PLAN

SIZE*	A	B	C
4"	42	32	130
6"	42	32	144
8"	42	32	156
10"	45	36	170

DIMENSIONS IN INCHES
* FIRE LINE SIZE

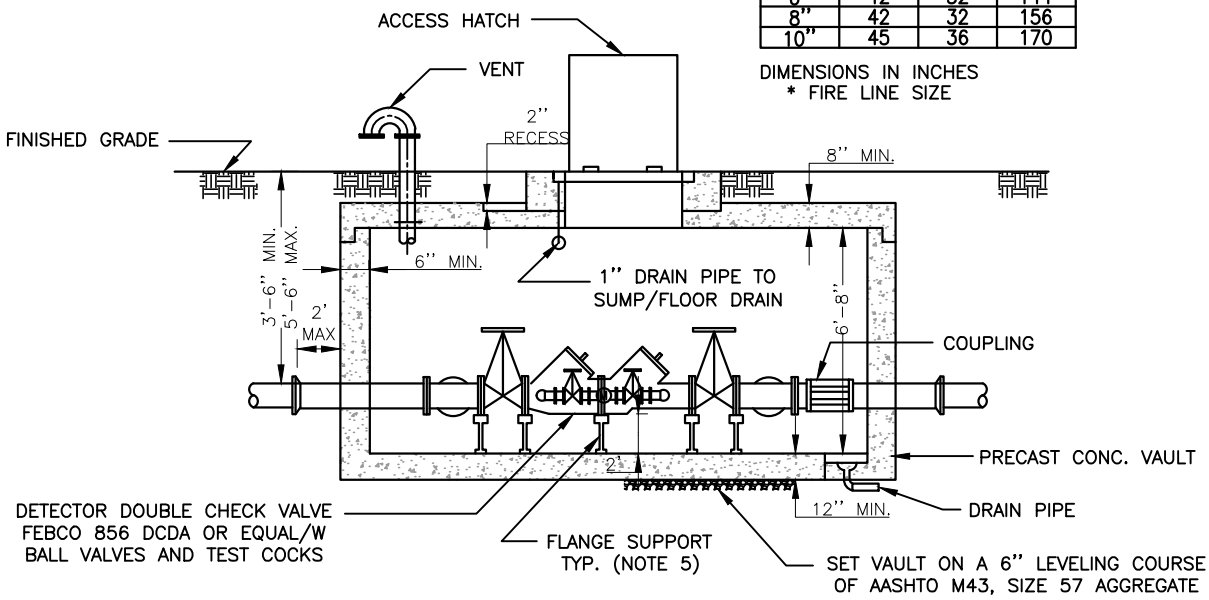

SECTION

NOTES:

1. GATE VALVE REQUIRED AT MAINLINE TAP
2. ALL BOLTS & NUTS TO BE S.S.
3. INSTALLATION FROM METER VAULT TO BUILDING AND INSIDE BUILDING SHALL MEET CECIL COUNTY REQUIREMENTS.
4. LADDER SHALL BE MOSHA ALUMINUM LADDER WITH SAFETY EXTENSION BAR AGAINST OUTSIDE BAR OF LADDER
5. FLANGE SUPPORTS SHALL BE STANDON MODEL S89.
6. 6" FLANGED VENT PIPE – EXTEND TO 1-FT. ABOVE FINISHED GRADE. SEE DETAIL THIS SHEET.

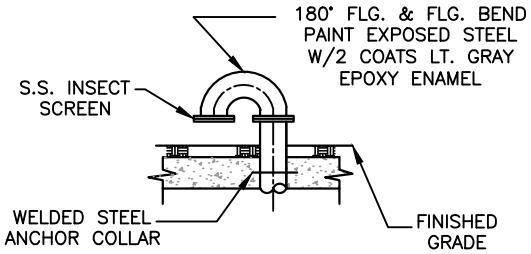

TYPICAL VENT PIPE

FOR ADDITIONAL NOTES: SEE SHEET 2 OF 2

TOWN OF NORTH EAST
INCORPORATED 1850

MAY 25, 2016
DATE

MAYOR AND COMMISSIONERS

STANDARD WATER DETAILS
FIRE SERVICE
(4" THRU 10" FIRE SUPPLY)

W 25

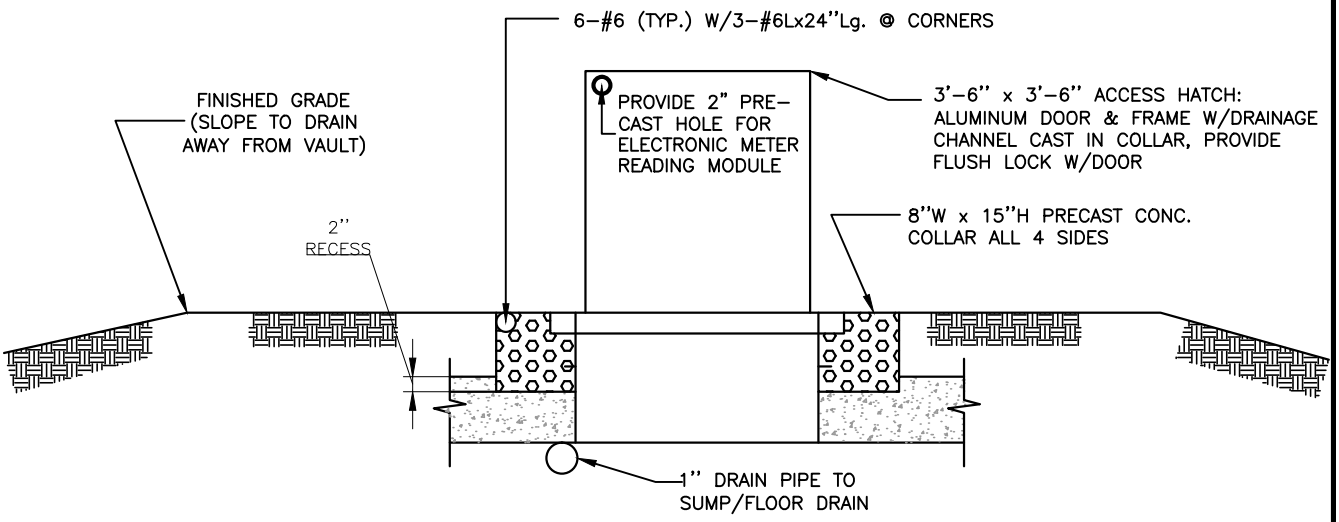

ACCESS HATCH DETAIL

ACCESS HATCH NOTES:

1. OFF–STREET GRASS AREA LOCATIONS (PREFERRED)–BILCO MODEL JH–20
2. ROADWAYS–BILCO MODEL HLC.
3. IN OFF–STREET PAVED AREAS TOP OF VAULT TO BE 1'–0'' ABOVE PAVING W/6'' SCH.40 STEEL PIPE BOLLARDS 7'–0'' LG. (3'–0'' BURIED) FILLED WITH CONCRETE & PAINTED YELLOW. FOUR REQUIRED, ONE AT EACH CORNER. SEE VP–22.
4. LOADS: LL = AASHTO H–20; DL = EARTH@100 PCF AND 42 PCF EQUIV. FLUID PRESSURE

NOTES:

1. LOCATE VAULT IN LEVEL GRASS AREA BEHIND CURB OR SIDEWALK WITHIN THE EASEMENT AREA, AT A LOCATION DESIGNATED BY THE TOWN ENGINEER. DO NO LOCATE IN DRIVEWAYS, SHOULDER AREAS, OR DITCHES. HATCH DOOR SHALL BE FLUSH WITH FINISHED GROUND, EXCEPT SEE 3. UNDER "ACCESS HATCH NOTES:."
2. WATER SERVICE PIPE MATERIAL SHALL BE AS FOLLOWS:
   ¾'' THRU 2½'' – TYPE K COPPER W/GRIP JOINT RED BRASS COUPLINGS.
   3'' & LARGER – D.I.P. MIN. CLASS 51
3. PRECAST VAULTS SHALL BE AS MANUFACTURED BY A.C. MILLER CONCRETE PRODUCTS CO., ROTONDO–PENN CAST, OR APPROVED EQUAL. SUBMIT VAULT DESIGN TO TOWN ENGINEER FOR REVIEW AND APPROVAL.
4. VALVES SHALL BE TOWN STANDARD.
5. NIPPLES FOR SMALL PIPING SHALL BE THREADED BRASS.
6. SEE STANDARD SPECIFICATIONS FOR UTILITY EASEMENT TO BE PROVIDED.
7. ALL VAULTS PENETRATIONS SHALL BE WATERTIGHT.

TOWN OF NORTH EAST INCORPORATED 1850	MAY 25, 2016 DATE MAYOR AND COMMISSIONERS	STANDARD WATER DETAILS FIRE SERVICE (4'' THRU 10'' FIRE SUPPLY)	W 25 2 OF 2